White Rabbit
a PTP application for sub-ns synchronization

Maciej Lipiński

Hardware and Timing Section
European Organization for Nuclear Research
Geneve, Switzerland

Institute of Electronic Systems
Warsaw University of Technology
Warsaw, Poland

March 2012

Outline

1. Introduction
2. Timestamps
3. Link Asymmetry
4. PTP&SyncE
5. WRPTP
6. Status
7. Conclusions

What is White Rabbit?

- Accelerator's control and timing (GSI, CERN)
- Based on well-known technologies
- Open Hardware and Open Software
- International collaboration (multi-lab, multi-company)
- Main features:
  - transparent, **high-accuracy** time distribution
  - low-latency, **deterministic** data delivery
  - designed for **high reliability**
  - plug & play.
- Other applications: Gran Sasso, Cherenkov Telescope Array, The Large High Altitude Air Shower Observatory, The Cubic Kilometre Neutrino Telescope

Time Distribution in White Rabbit

- Synchronization with **sub-ns** accuracy over fiber
- Combination of
  - Precision Time Protocol (**PTP**) synchronization
  - Synchronous Ethernet (**SyncE**) syntonization
  - Digital Dual-Mixer Time Difference (**DDMTD**) phase detection
- WR Link:

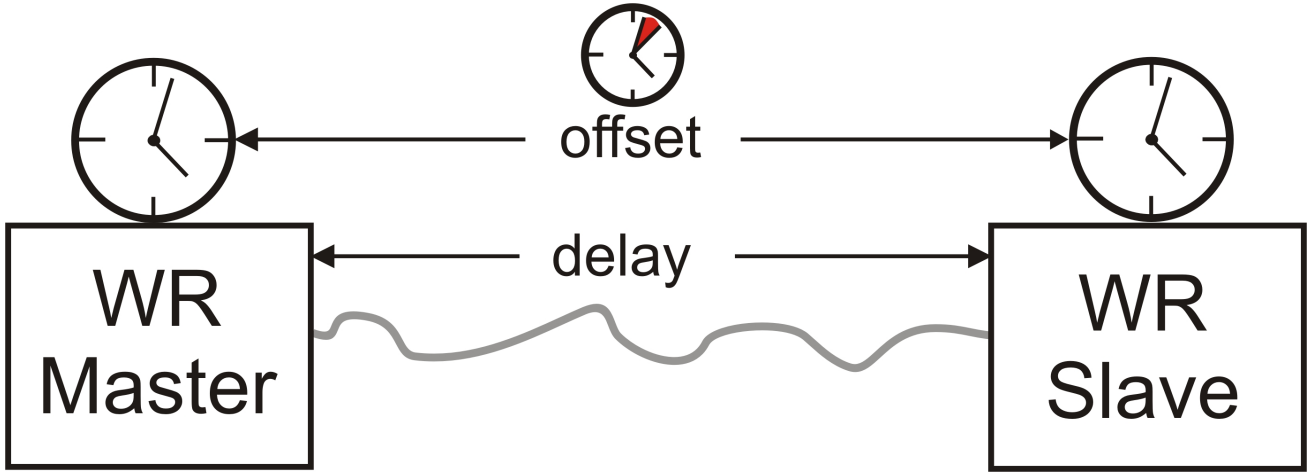

PTP is OK but ...

What are the issues...	and	... how we address them
PTP-base syntonization	$\Rightarrow$	SyncE
limited precision and resolution	$\Rightarrow$	SyncE DDTMD phase detection
unknown link asymmetry	$\Rightarrow$	SyncE DDTMD phase detection WR Link Delay Model

WR extension to PTP (**WRPTP**) for extra data exchange and logic

Fine Delay Measurement

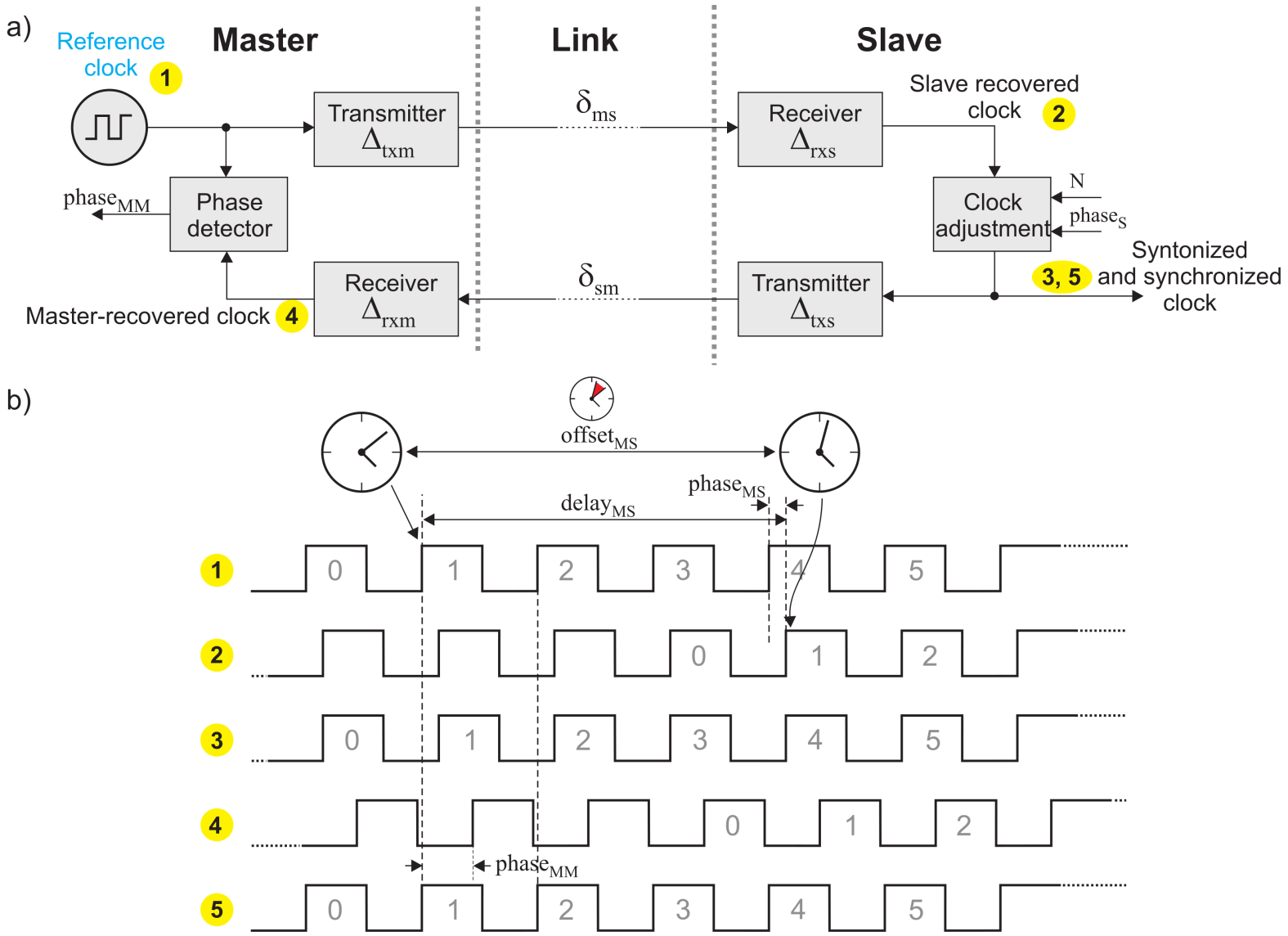

Link Asymmetry

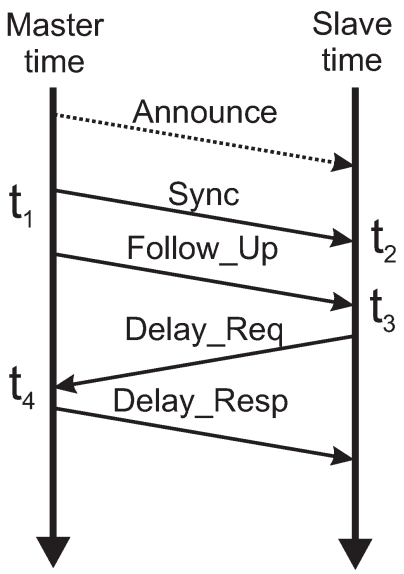

$$\mu = \frac{(t_4 - t_1) - (t_3 - t_2)}{2}$$

μ

?

$$delay_{ms} = \mu + asymmetry$$

$$offset_{ms} = t_2 - (t_1 + delay_{ms})$$

Link Delay Model

$$delay_{ms} = \Delta_{tx_m} + \delta_{ms} + \Delta_{rx_s}$$
$$delay_{sm} = \Delta_{tx_s} + \delta_{sm} + \Delta_{rx_m}$$

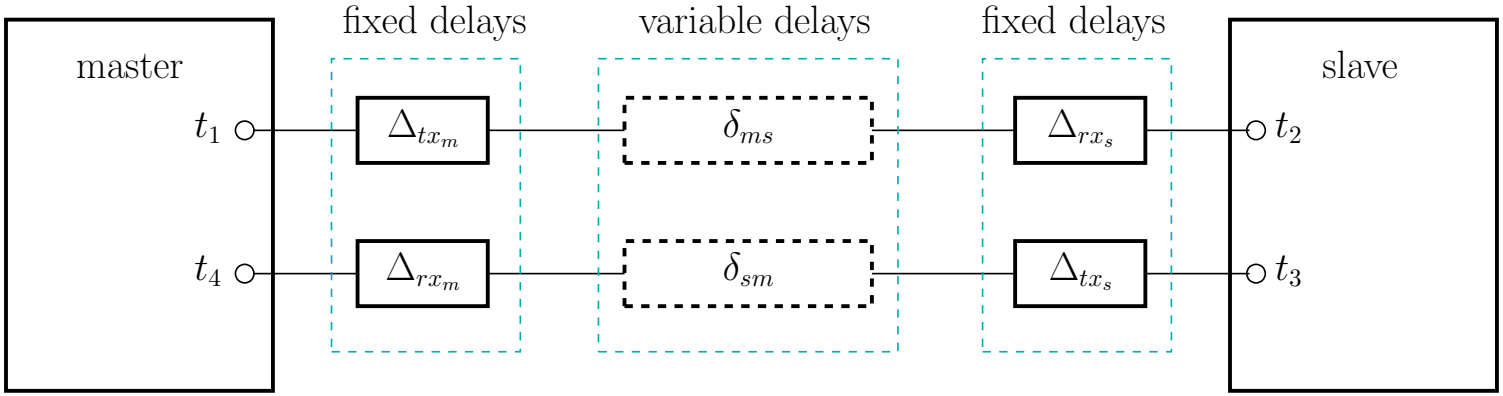

Relative Delay Coefficient (α)
for 1000BASE-BX10 over a Single-mode Optical Fiber

$$\delta_{ms} = (1 + \alpha)\,\delta_{sm}$$

Fixed Delays

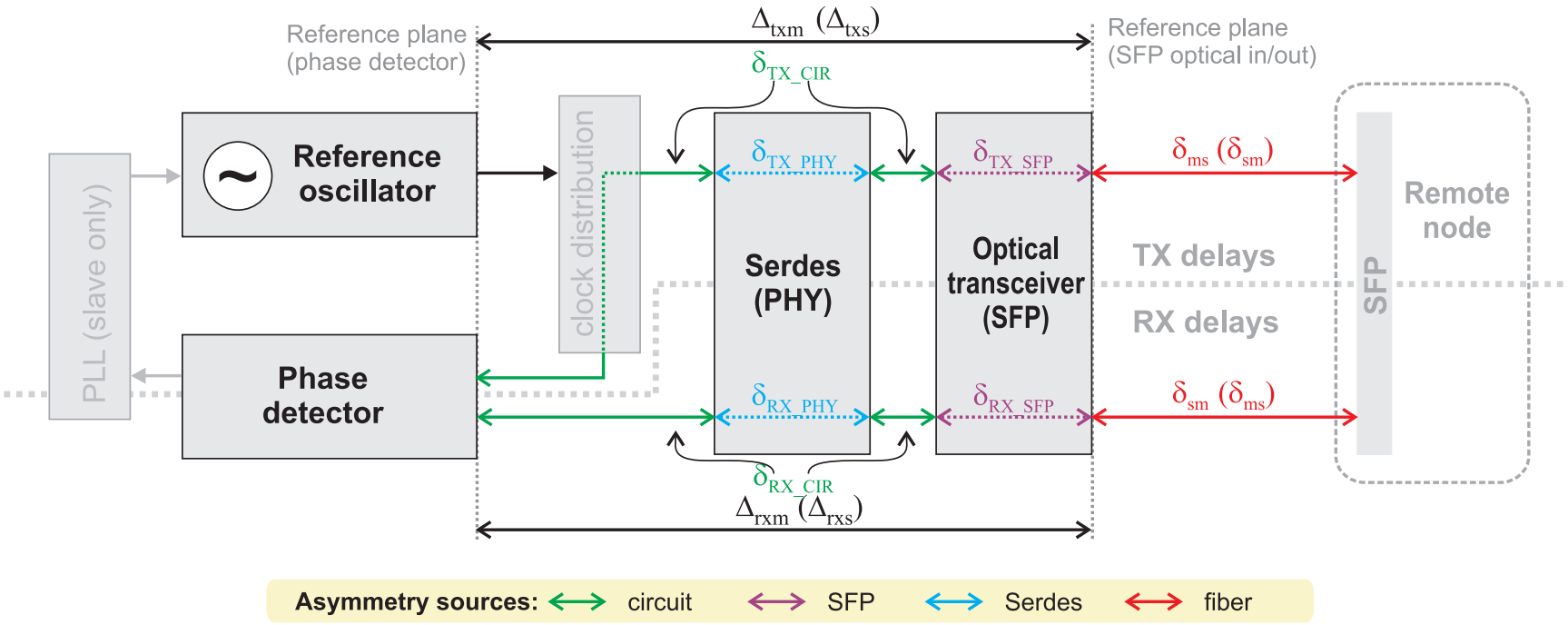

Link Delay Model: fiber optic solution

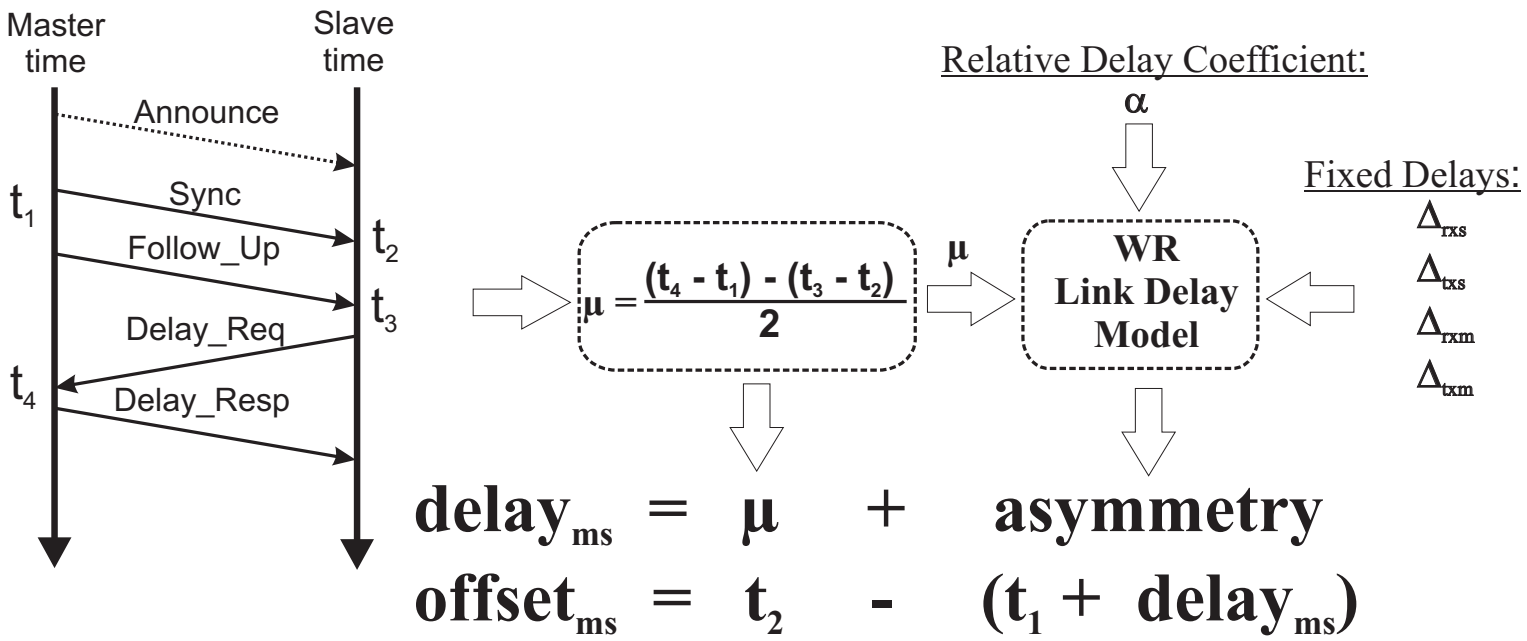

Solution for Ethernet over a Single-mode Optical Fiber

$$asymmetry = \Delta_{tx_m} + \Delta_{rx_s} - \frac{\Delta - \alpha\mu + \alpha\Delta}{2 + \alpha}$$

PTP and SyncE in WR

- Compatibility with PTP verified
- Compatibility with SyncE for further study
- Frequency distribution aligned with PTP's logic topology
- PTP's Announce messages used for WR-peers recognition

White Rabbit extension to PTP (WRPTP)

- WR-peers recognition
- Calibration (fixed delays measurement)
- Exchange of WR-data
- Support of redundancy
- Mapping over IEEE802.3/Ethernet

WR-peer recognition and WR-data exchange

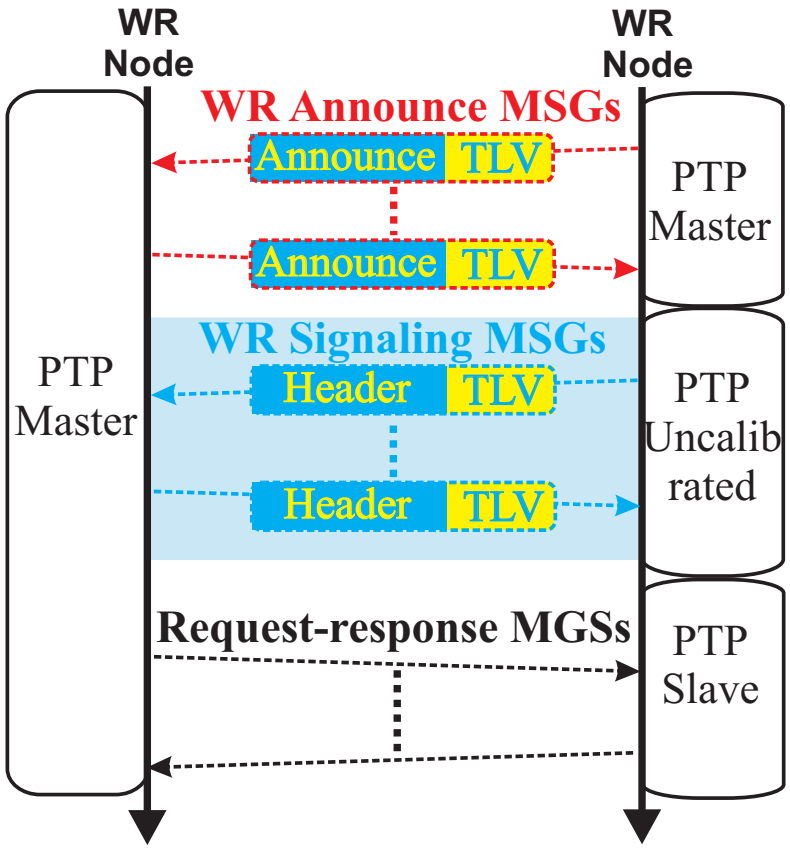

Two WR devices

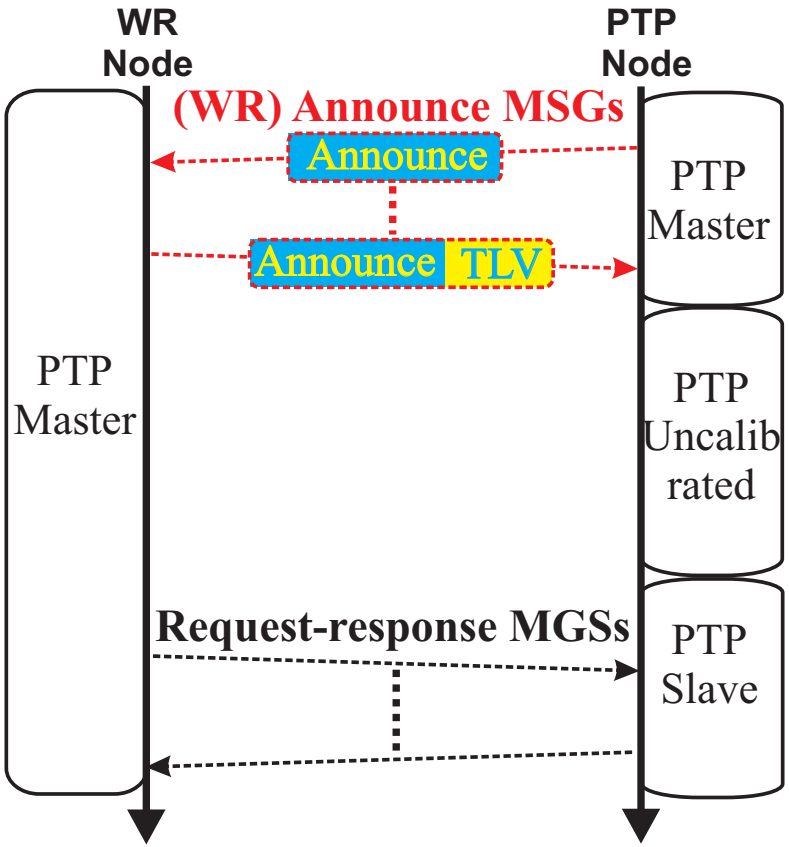

WR and non-WR device

WR Link Setup

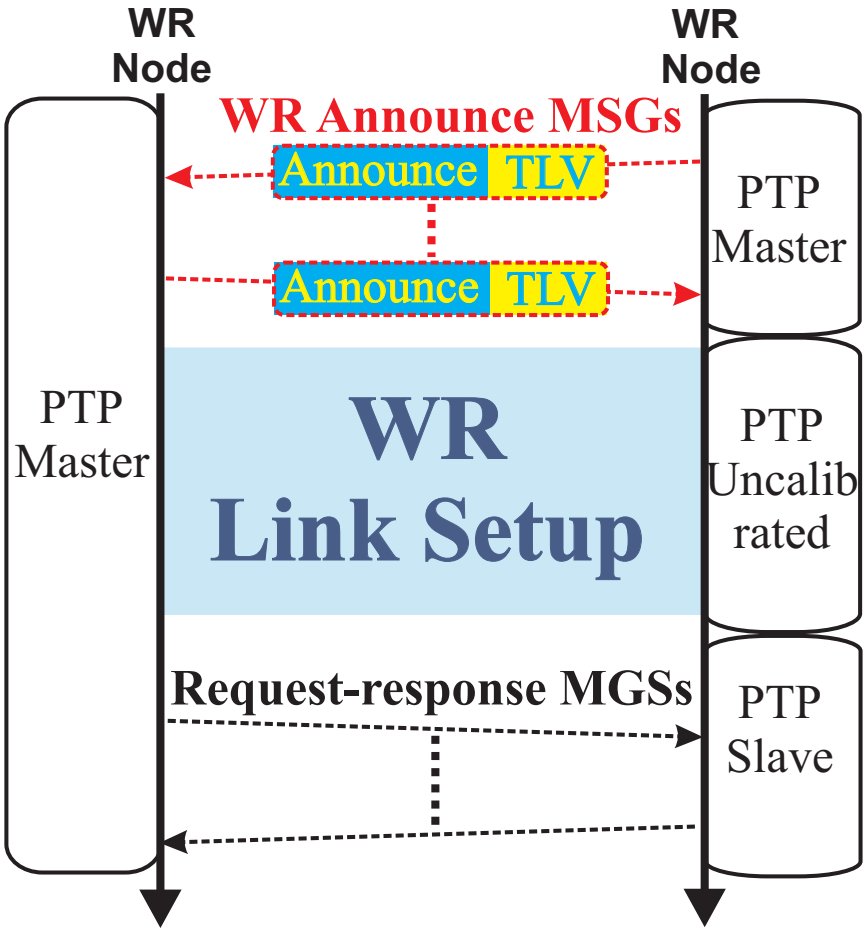

- Frequency locking
- Calibration
- Exchange of WR-parameters
- WR Finite State Machine
- WR Signaling Messages

Modified Best Master Clock Algorithm (mBMCA)

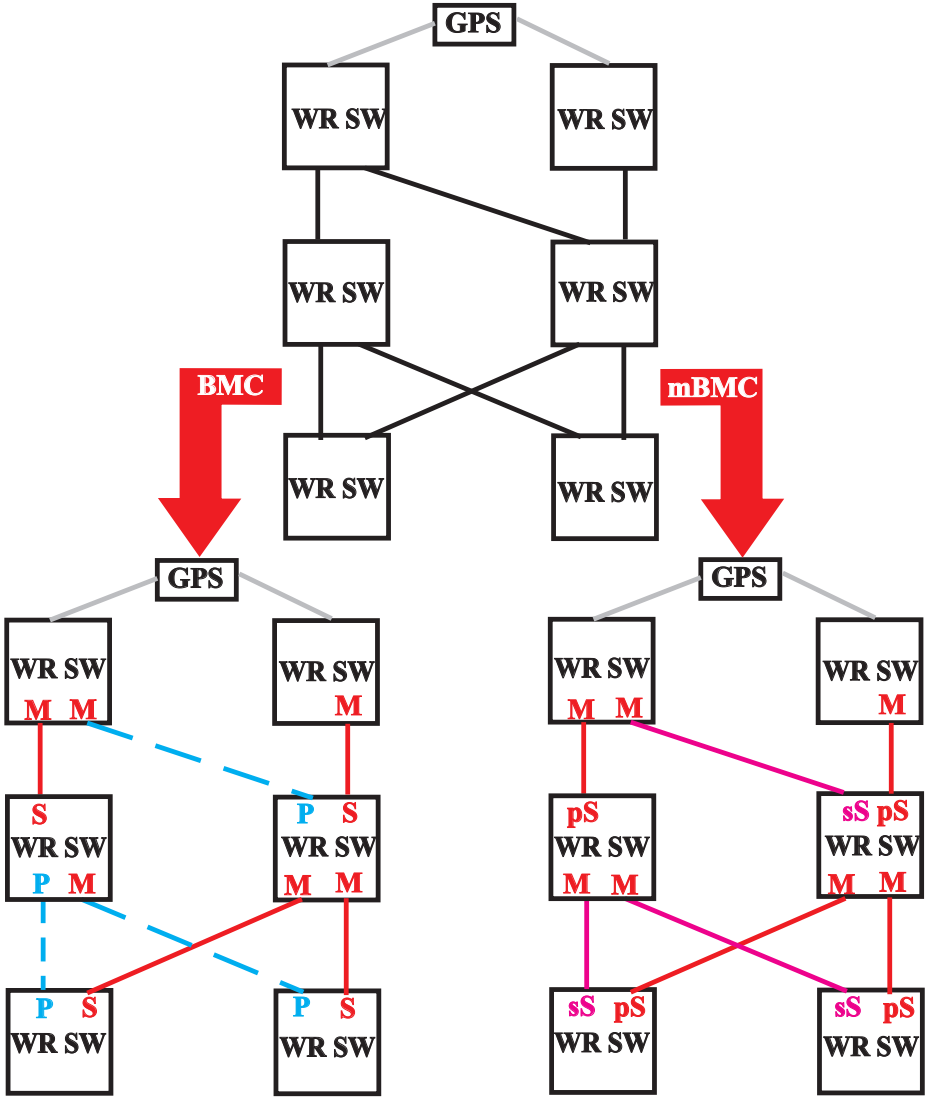

Clock Recovery System and mBMCA

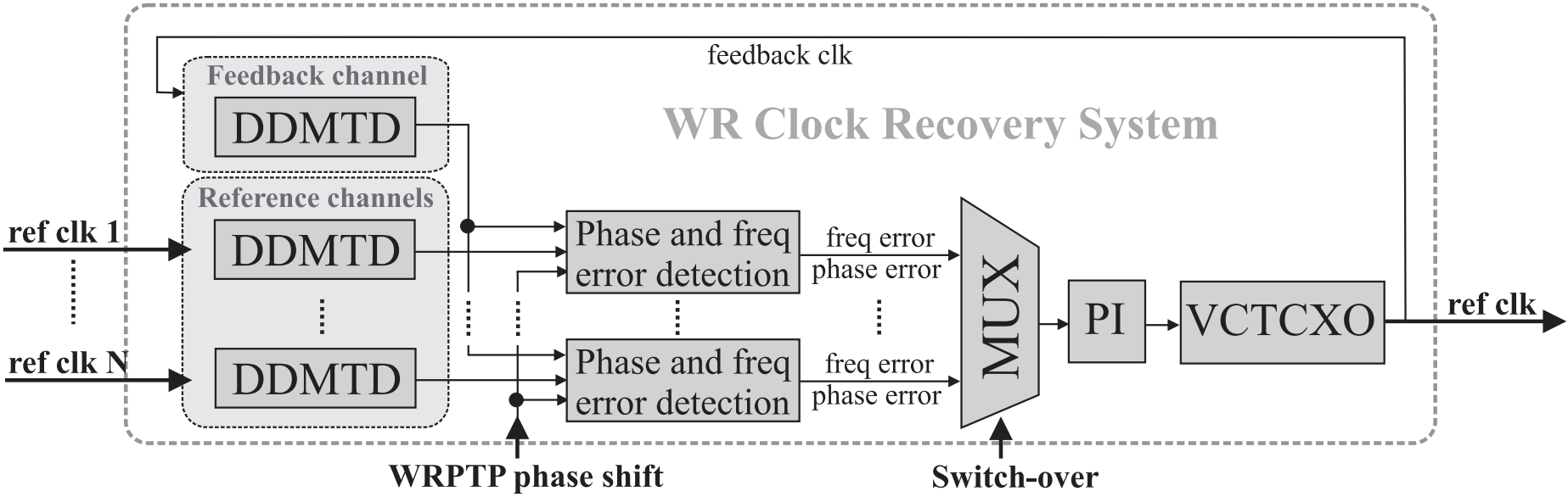

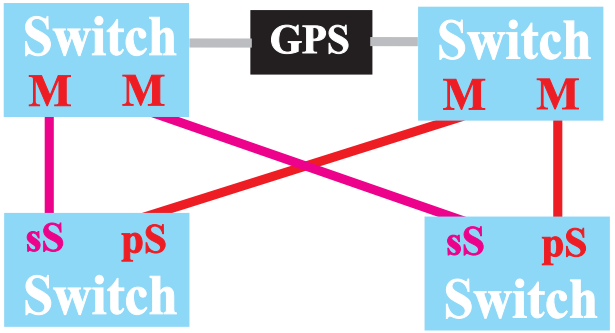

Test bed

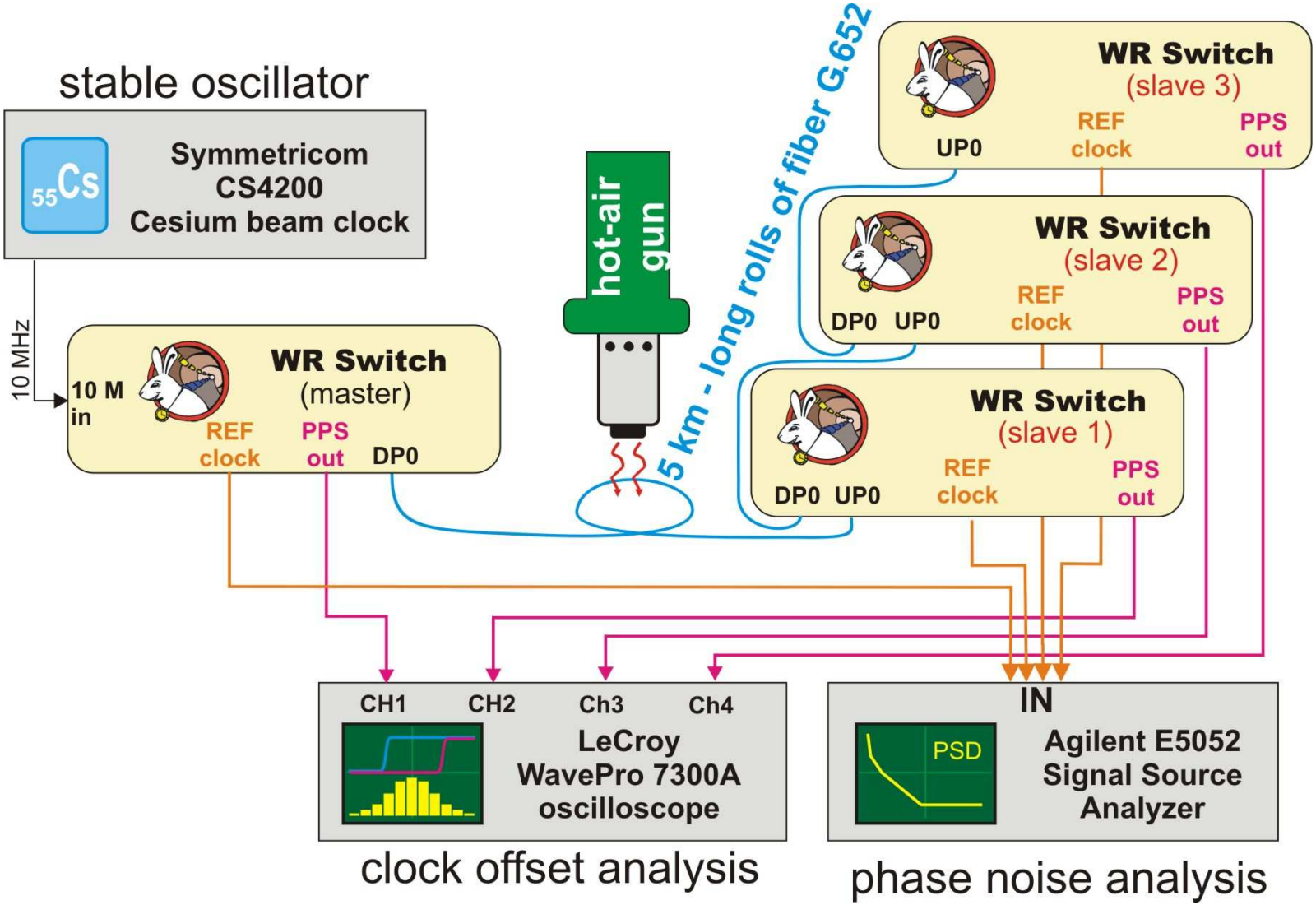
stable oscillator
Symmetricom
CS4200
Cesium beam clock
10 MHz
10 M in
WR Switch
(master)
REF clock
PPS out
DP0
hot-air gun
5 km - long rolls of fiber G.652
WR Switch
(slave 3)
UP0
REF clock
PPS out
WR Switch
(slave 2)
DP0 UP0
REF clock
PPS out
WR Switch
(slave 1)
DP0 UP0
REF clock
PPS out
CH1 CH2 Ch3 Ch4
LeCroy
WavePro 7300A
oscilloscope
clock offset analysis
IN
PSD
Agilent E5052
Signal Source
Analyzer
phase noise analysis

Test results

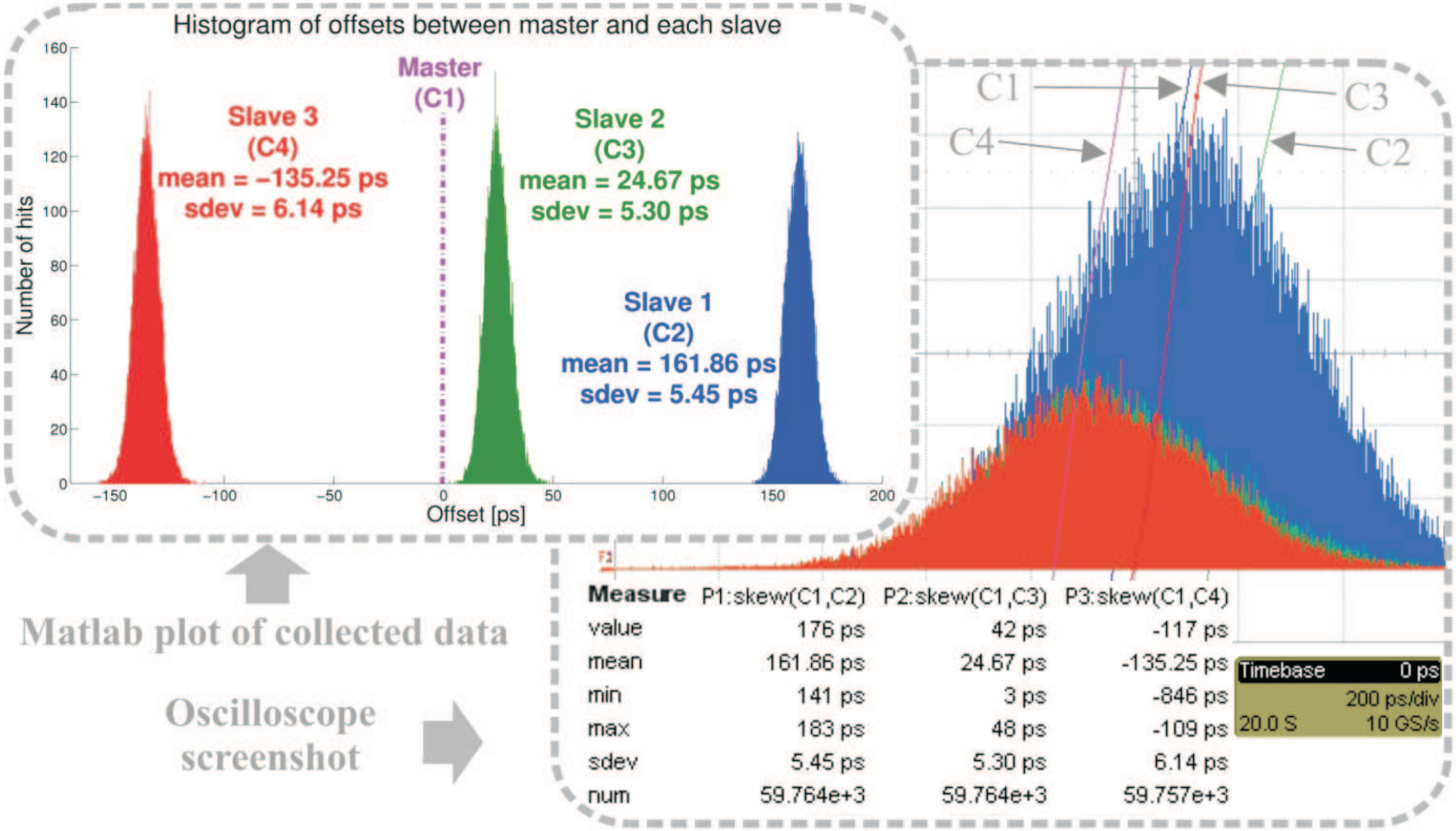

White Rabbit Switch (V3)

- Central element of WR network
- Original design optimized for timing, designed from scratch
- 18 1000BASE-BX10 ports
- Capable of driving 10 km of SM fiber

Conclusions

- Excellent results:
  $<$ 1ns accuracy and $<$ 10ps precision over 15km
- According to ISPCS2010 Plug Fest results:

White Rabbit is the most accurate PTP implementation in the World !

- Robust synchronization:
  - high precision - rock solid synchronization
  - support for seamless switchover
- Benefits from compatibility with standards:
  - wide support
  - commercial feasibility
  - hybrid networks
  - general-purpose solution
- Great interest from many institutes and companies

Thank you

Any questions?

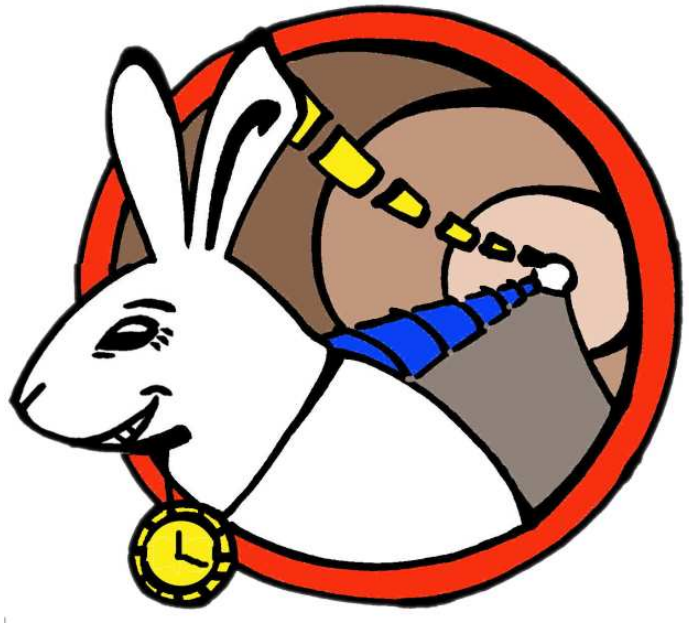

Fixed Delays Measurement

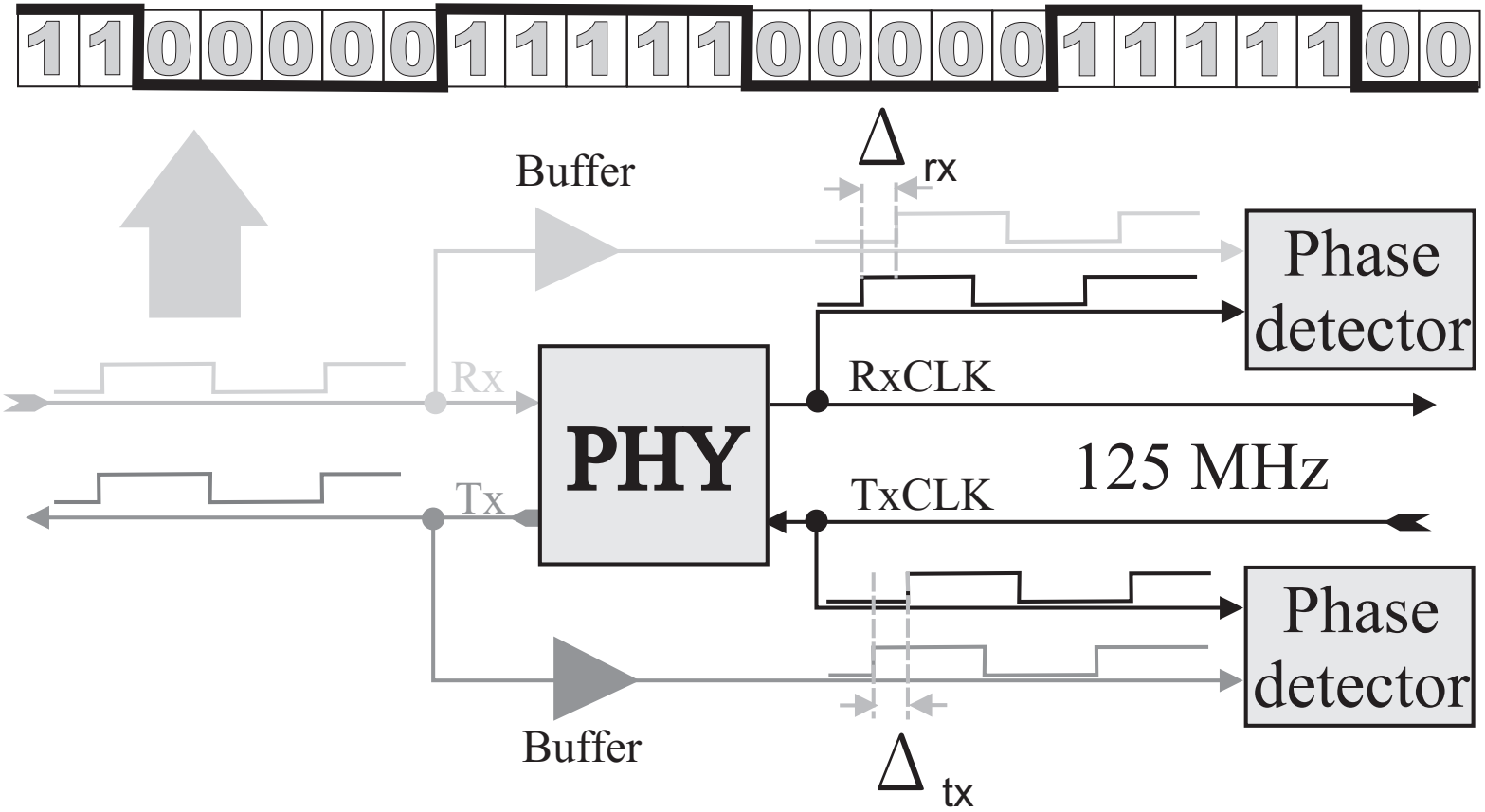

Proposed topology of WR network at CERN

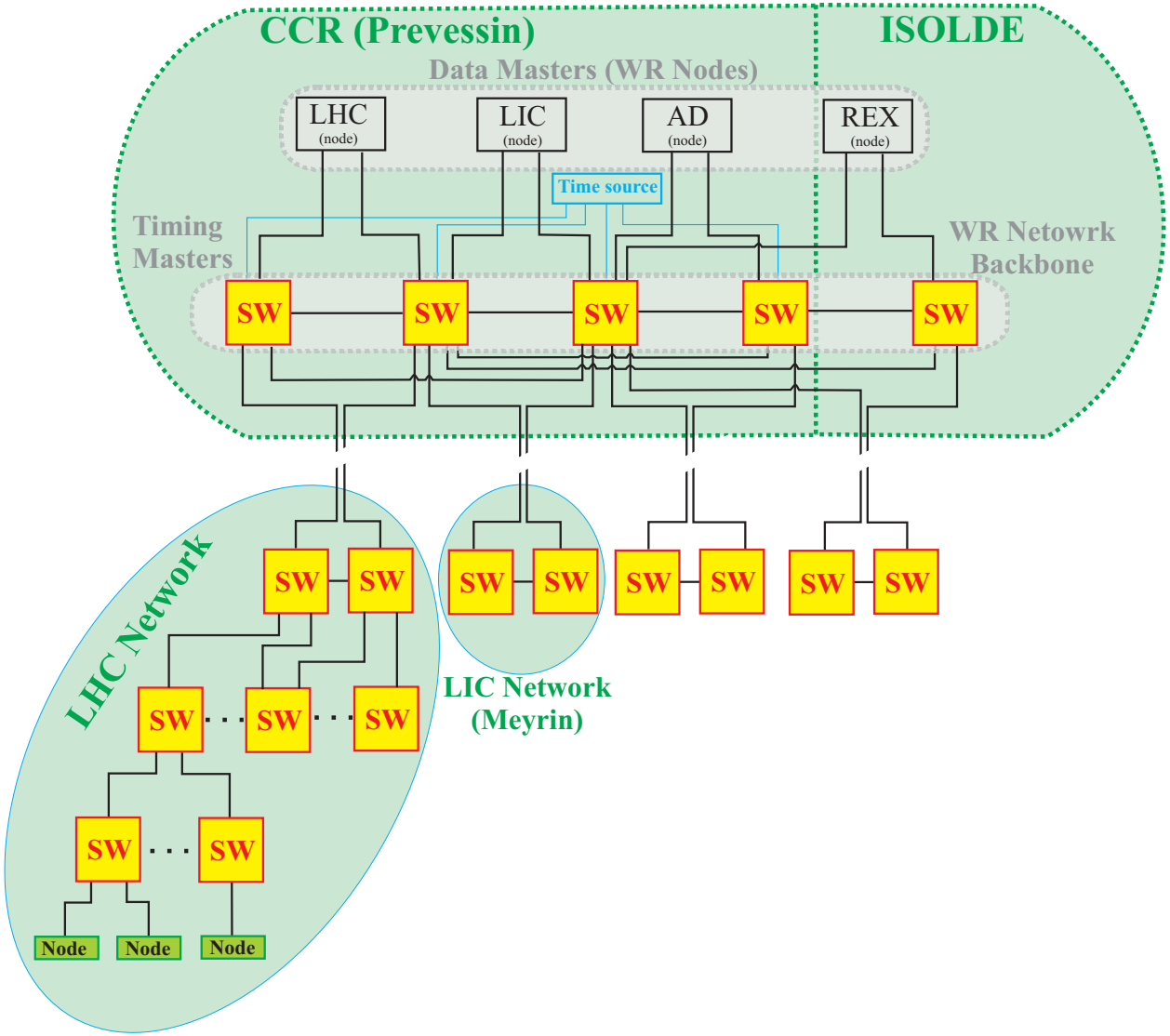

WR-compliant Hardware Kit

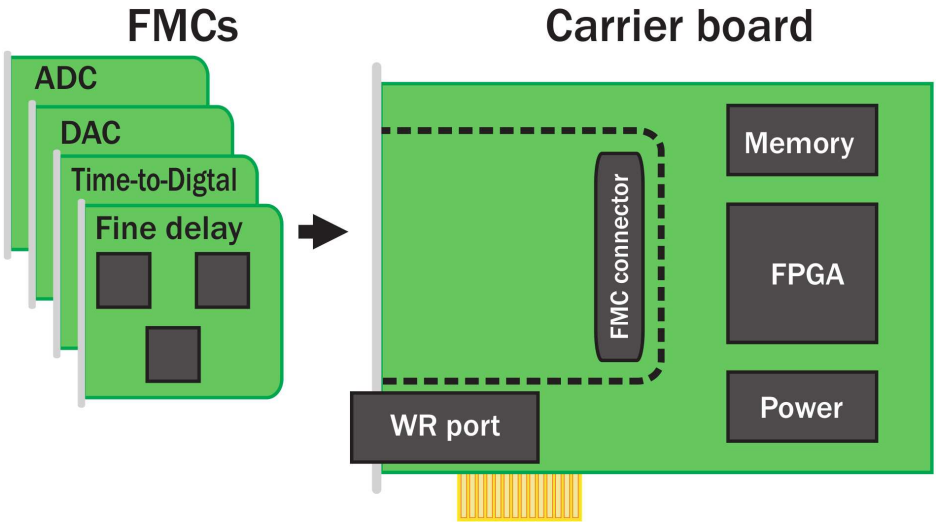

Co-HT FMC-based Hardware Kit:

- FMCs (FPGA Mezzanine Cards) with ADCs, DACs, TDCs, fine delays, digital I/O
- Carrier boards in PCI-Express, VME and uTCA formats
- All carriers are equipped with a White Rabbit port