Methods to increase reliability and ensure determinism in a White Rabbit Network

Maciej Lipinski

Institute of Electronic Systems @ Warsaw University of Technology
Hardware and Timing Section @ CERN

XXXVI-th IEEE-SPIE Joint Symposium Wilga 2015
30 May 2015

Outline

1. Introduction to White Rabbit
2. Reliable synchronization
3. Reliable data distribution
4. Conclusions & Future

Outline

1 Introduction to White Rabbit

2 Reliable synchronization

3 Reliable data distribution

4 Conclusions & Future

What is White Rabbit?

- Open Hardware & Software

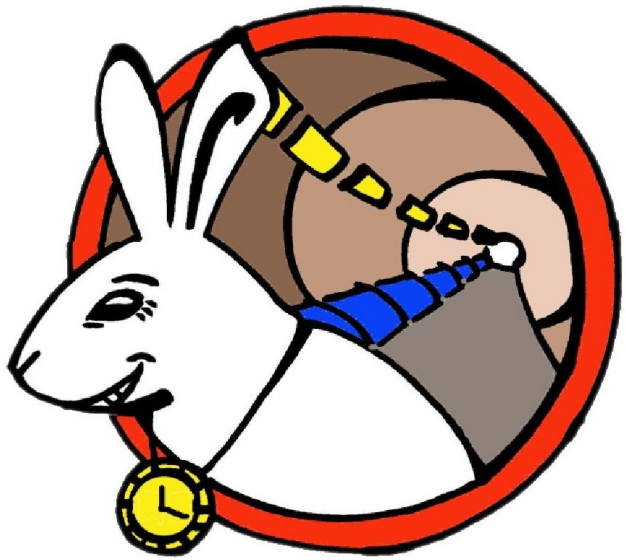

What is White Rabbit?

- Open Hardware & Software
- International collaboration

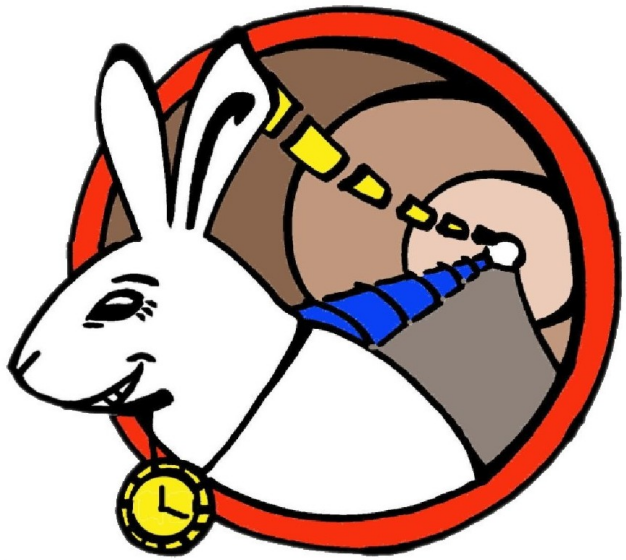

What is White Rabbit?

- Open Hardware & Software
- International collaboration
- Extension to 1 Gigabit Ethernet

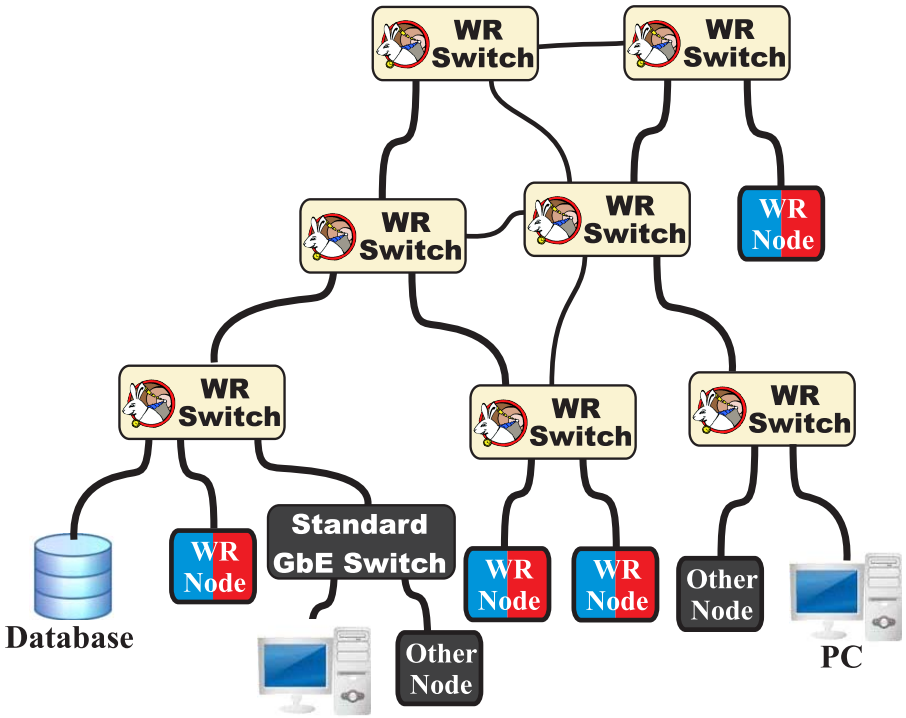

What is White Rabbit?

- Open Hardware & Software
- International collaboration
- Extension to 1 Gigabit Ethernet
  1. Sub-ns reliable synchronization

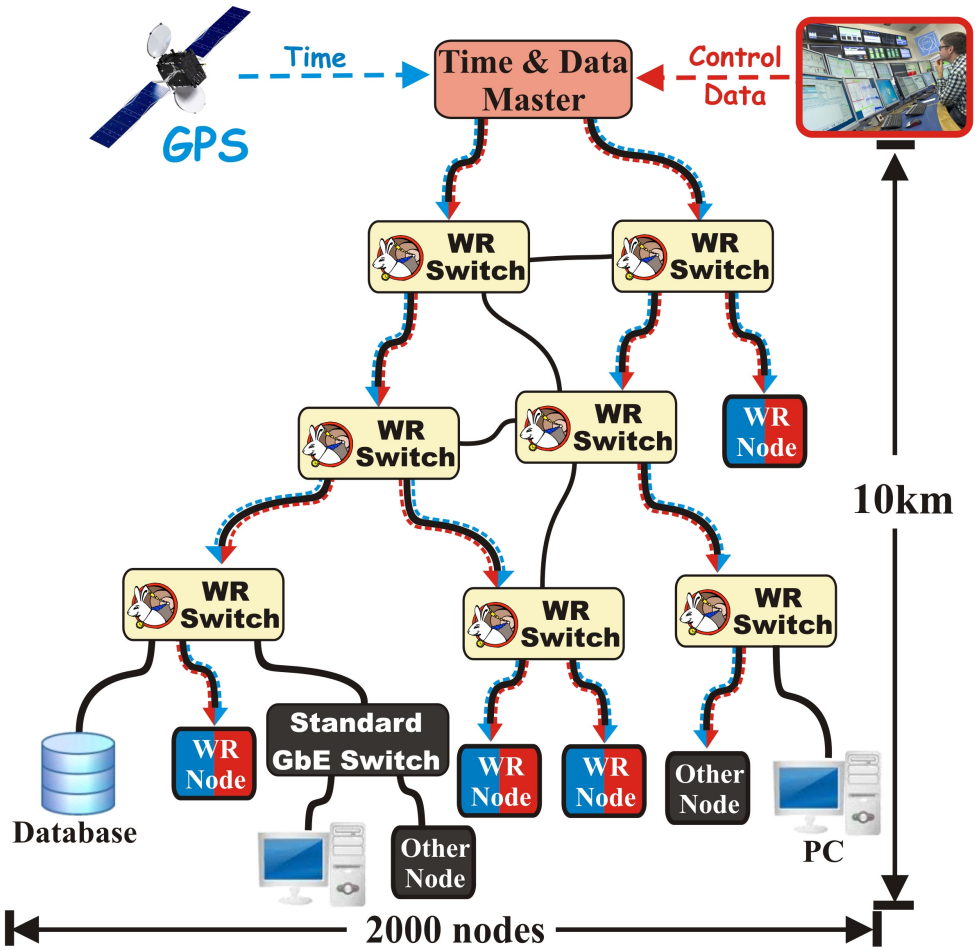

What is White Rabbit?

- Open Hardware & Software
- International collaboration
- Extension to 1 Gigabit Ethernet
  1. Sub-ns reliable synchronization
  2. Deterministic, reliable and low-latency data delivery

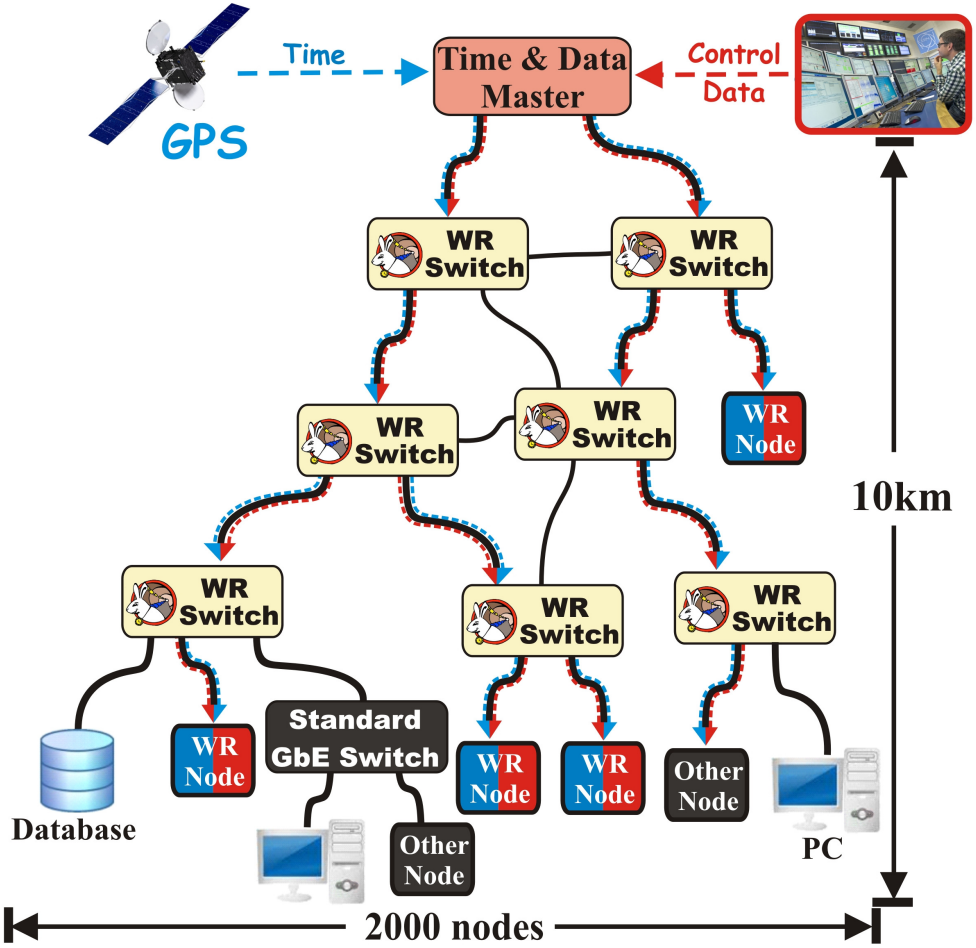

Why White Rabbit?

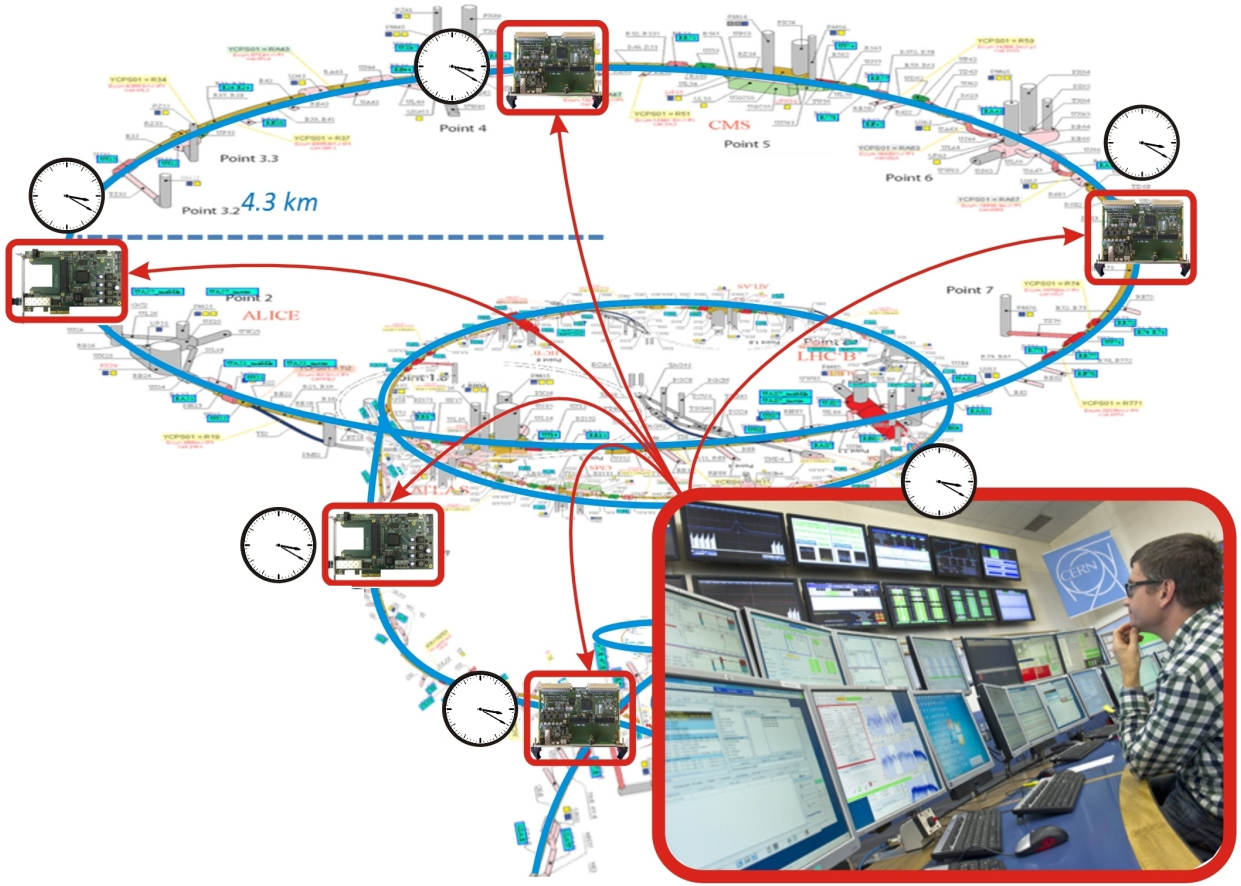

Why White Rabbit?

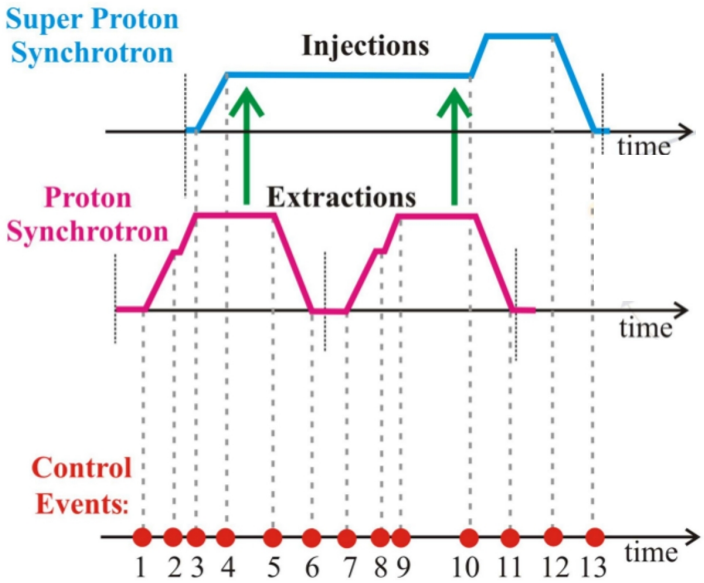

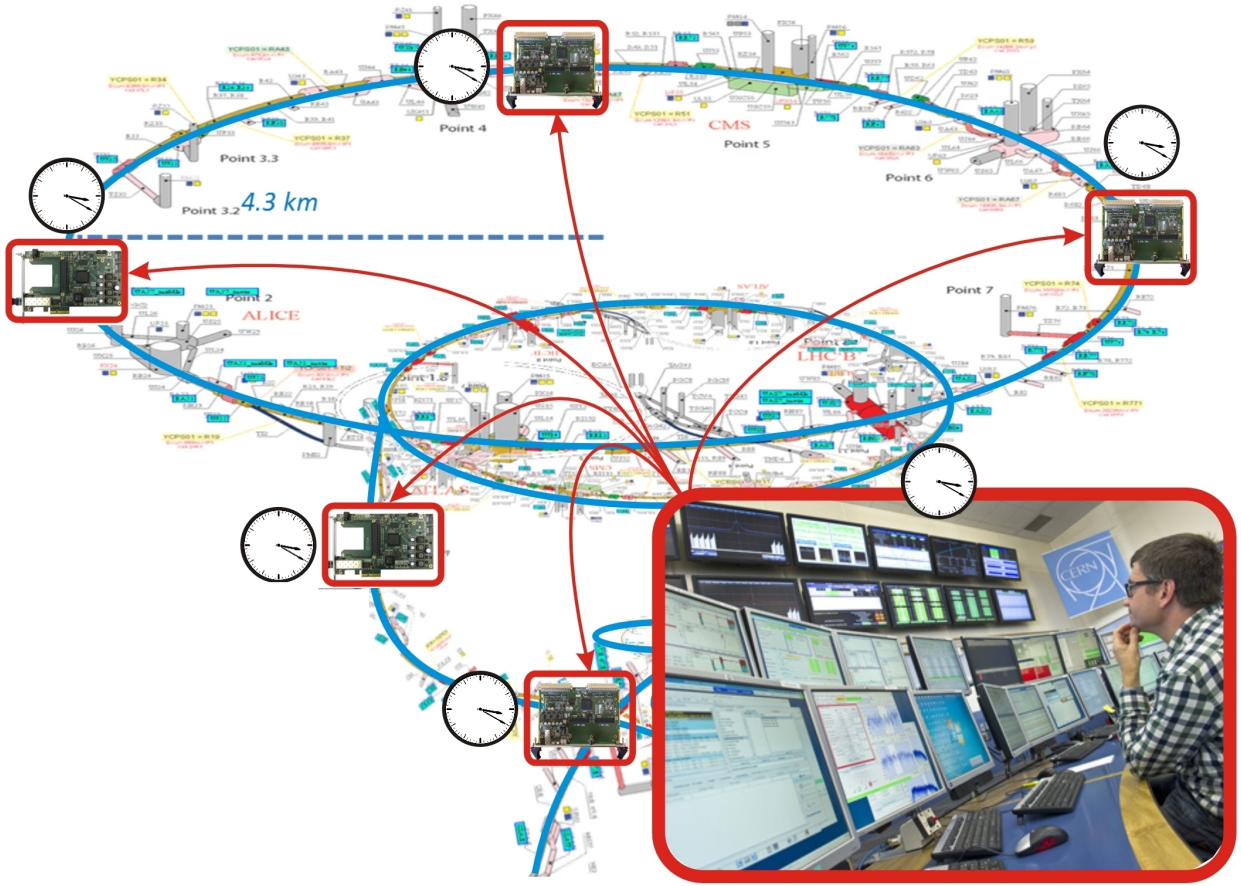

Why White Rabbit?

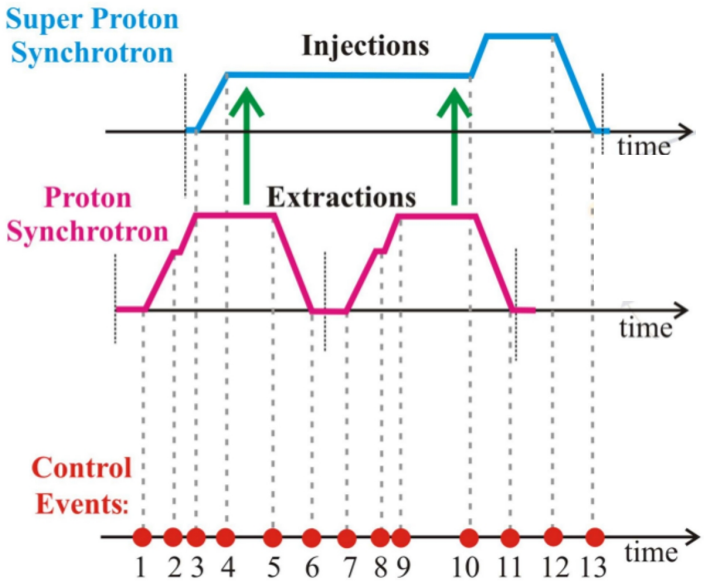

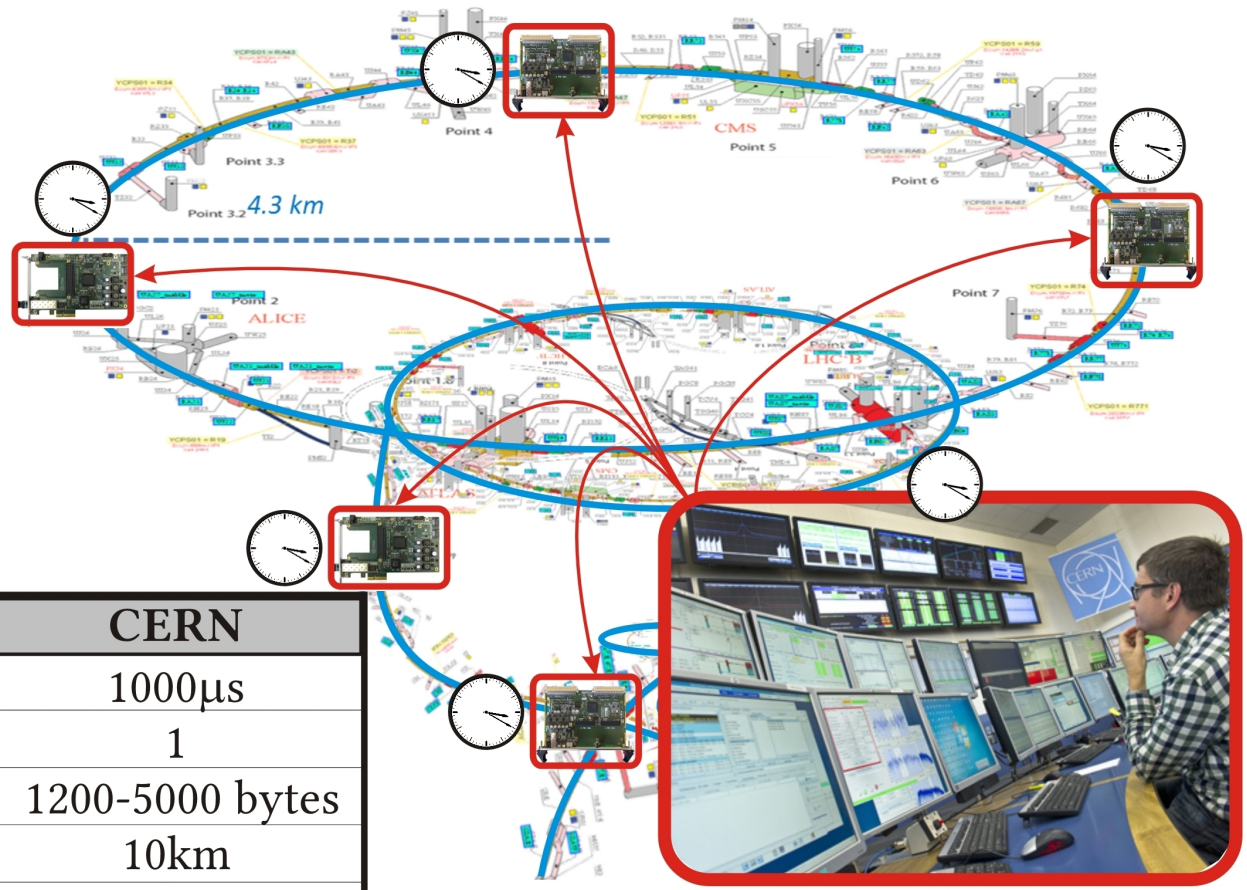

Requirement	CERN
Max latency	1000µs
CMs lost per year	1
CM size	1200-5000 bytes
Network span	10km
Accuracy	up to 1ns

Reliability and determinism in White Rabbit

Reliability and determinism in

1. Synchronization
   - network redundancy
   - sub-ns accuracy in transient
2. Data distribution
   - network upper bound latency by design
   - network redundancy
   - determinism and data delivery in transient

There is no other exiting solution to meet CERN requirements

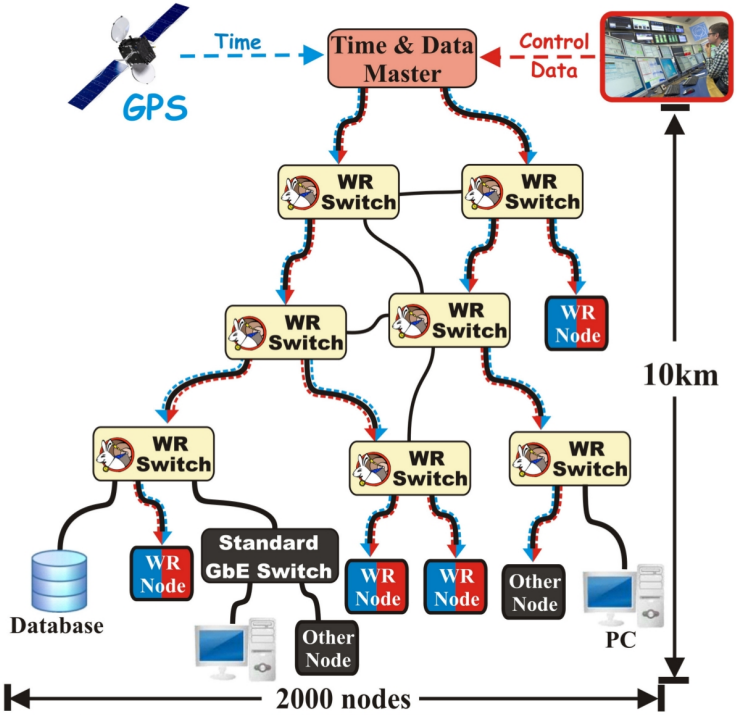

Requirement	CERN
Max latency	1000µs
CMs lost per year	1
CM size	1200-5000 bytes
Network span	10km
Accuracy	up to 1ns

Outline

1 Introduction to White Rabbit

2 Reliable synchronization

3 Reliable data distribution

4 Conclusions & Future

Support for seamless synchronization redundancy

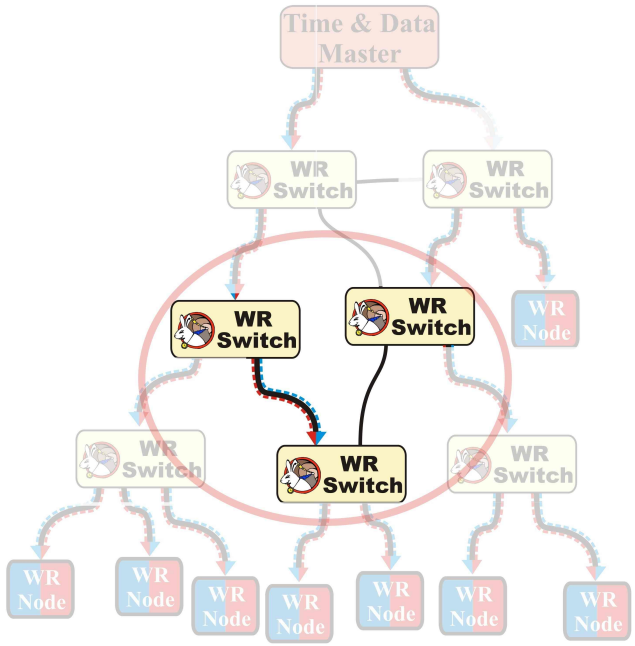

Support for seamless synchronization redundancy

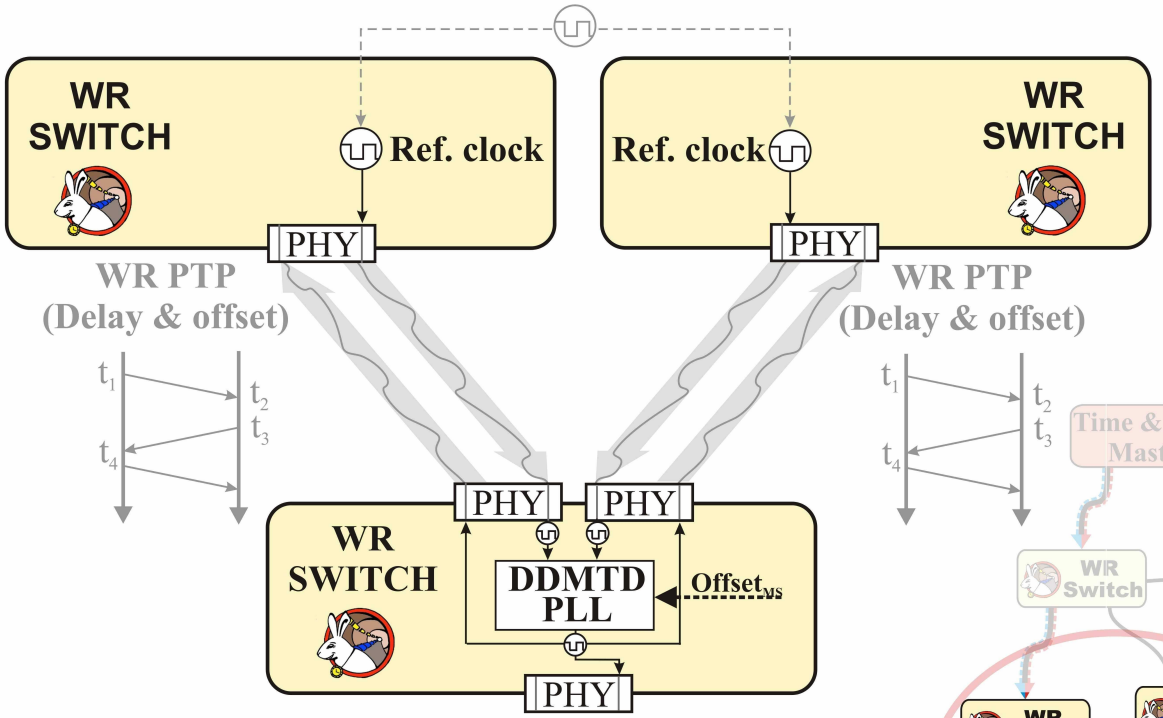

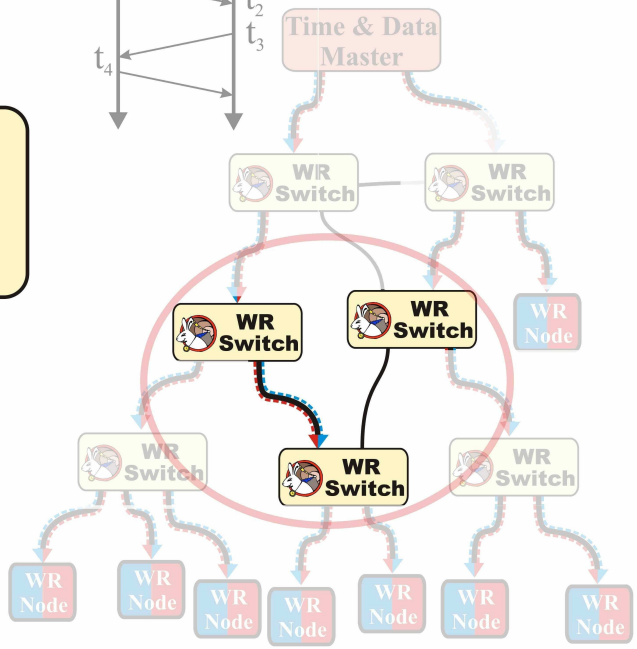

Seamless switchover requires:

Protocol: WRPTP

Hardware: DDMTD PLL

Support for seamless synchronization redundancy

- Customized Precision Time Protocol (PTP):
  - Multi-path synchronization by static configuration
  - Multiple backup management through priority
  - Hardware support for PTP-compatible holdover notification
- Dedicated Phase-Locked Loop (PLL):
  - Multi-channel phase detection, seamless channel switchover
  - Short-term holdover
  - Phase-based failure pre-detection with multiple backups

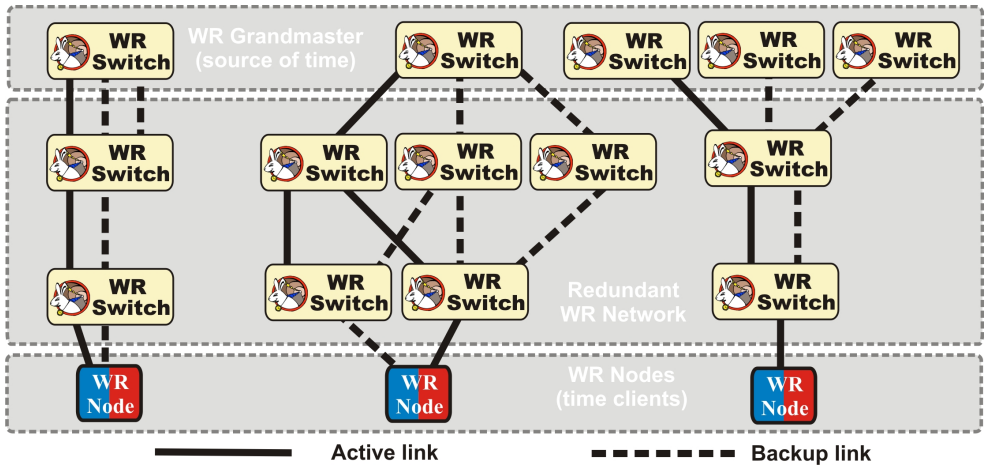

Tests and measurement

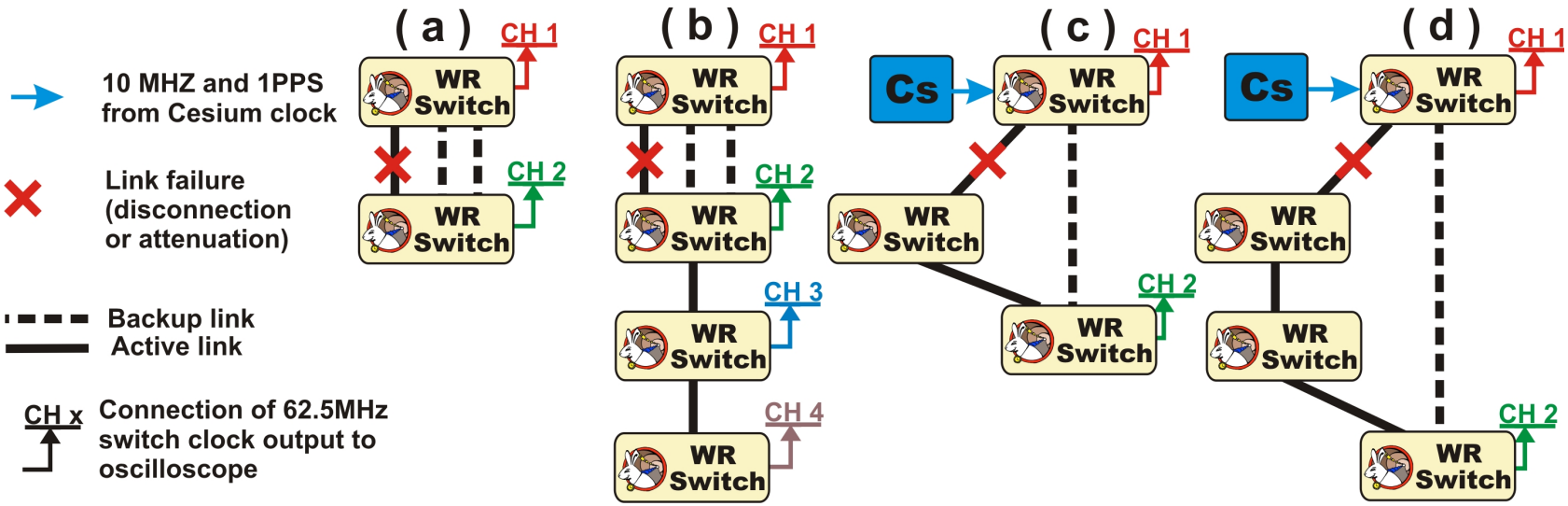

Tests and measurement

Estimated phase jump during switchover between backup links (scenario a)

	One backup port, disconnected fiber			Two backup ports, disconnected fiber			One backup ports, attenuated fiber		Two backup ports, attenuated fiber	
	Test 1	Test 2	Test 3	Test 4	Test 5	Test 6	Test 7	Test 8	Test 9	Test 10
Oscilloscope estimate	293	116	77	29	0	43	0	0	0	0
SoftPLL estimate min	280	157	130	51	61	71	29	28	24	30
SoftPLL estimate max	337	171	181	79	79	78	40	38	39	40

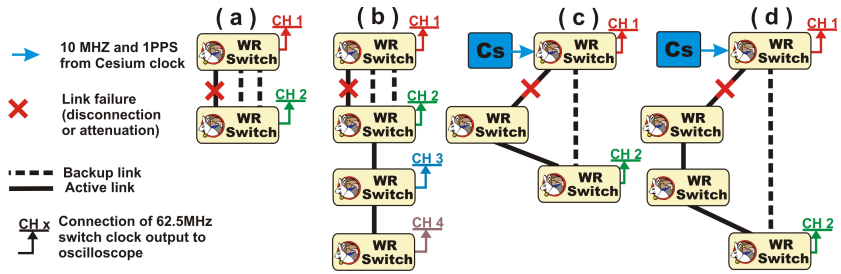

Tests and measurement

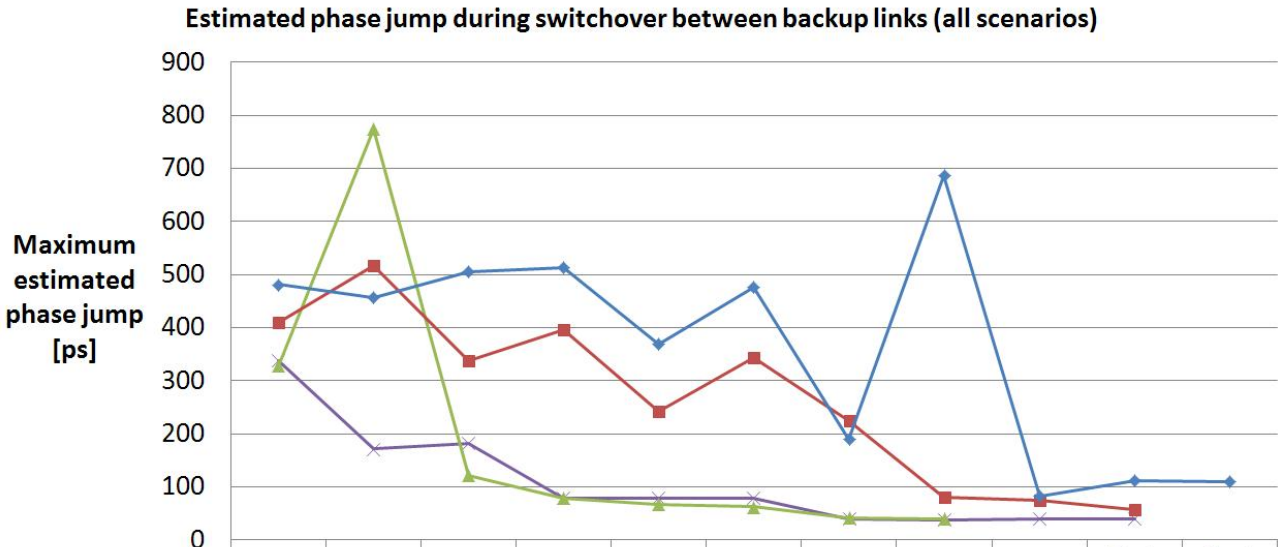

	Test 1	Test 2	Test 3	Test 4	Test 5	Test 6	Test 7	Test 8	Test 9	Test 10	Test 11
Scenario a	337	171	181	79	79	78	40	38	39	40	
Scenario b	328	775	121	79	66	62	41	40			
Scenario c	409	517	338	397	242	343	224	80	75	57	
Scenario d	481	457	506	513	369	476	189	687	82	111	109

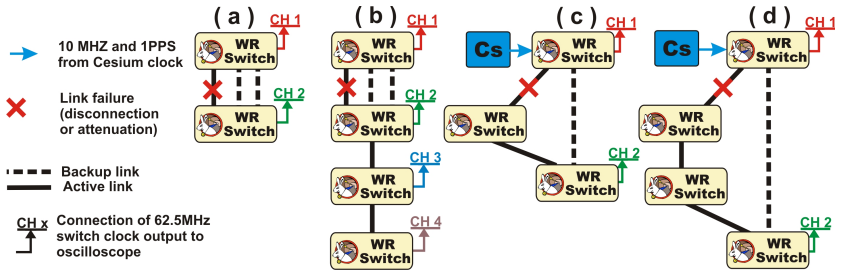

Outline

1 Introduction to White Rabbit

2 Reliable synchronization

3 Reliable data distribution

4 Conclusions & Future

Reliable data distribution in White Rabbit

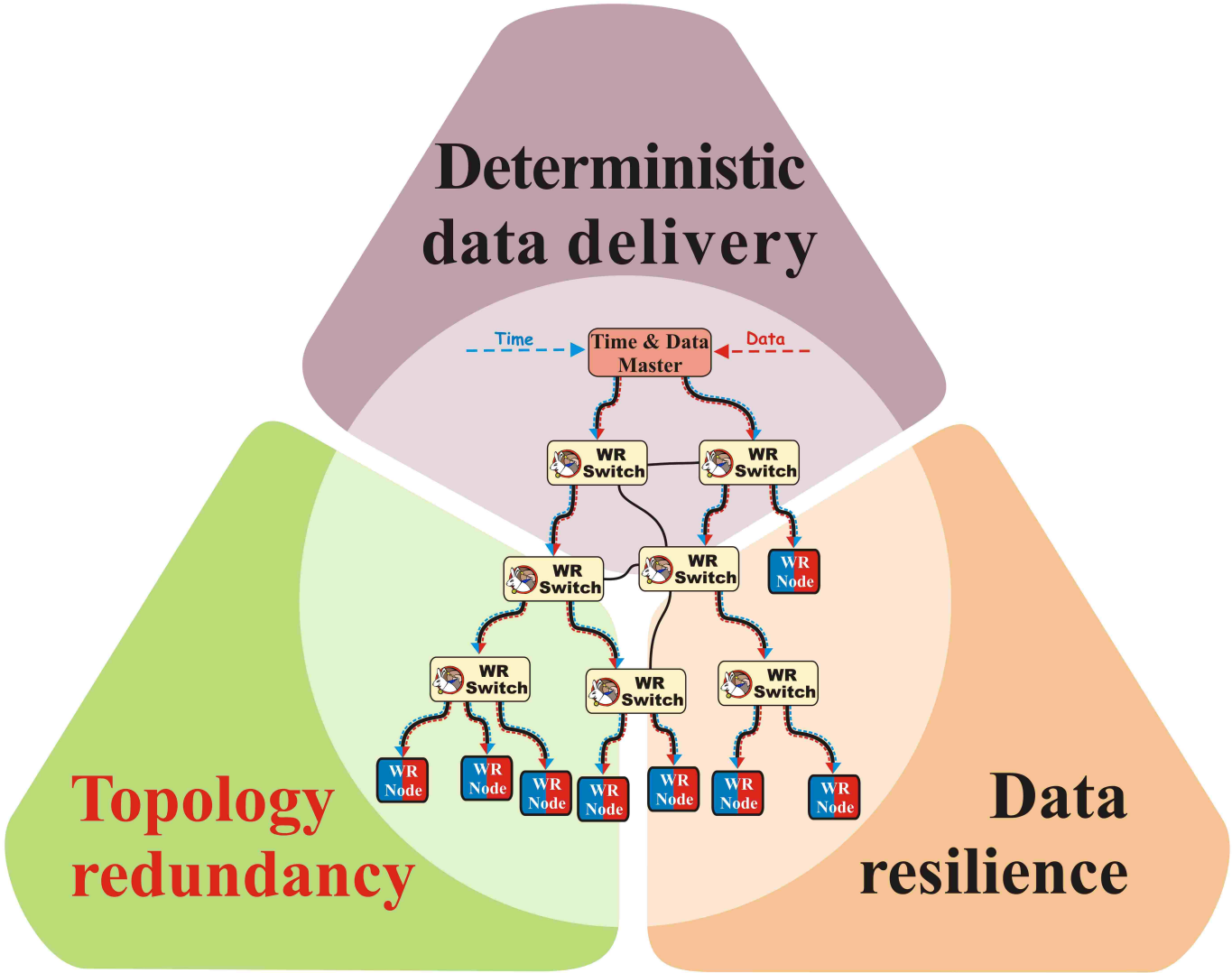

Reliable data distribution in White Rabbit

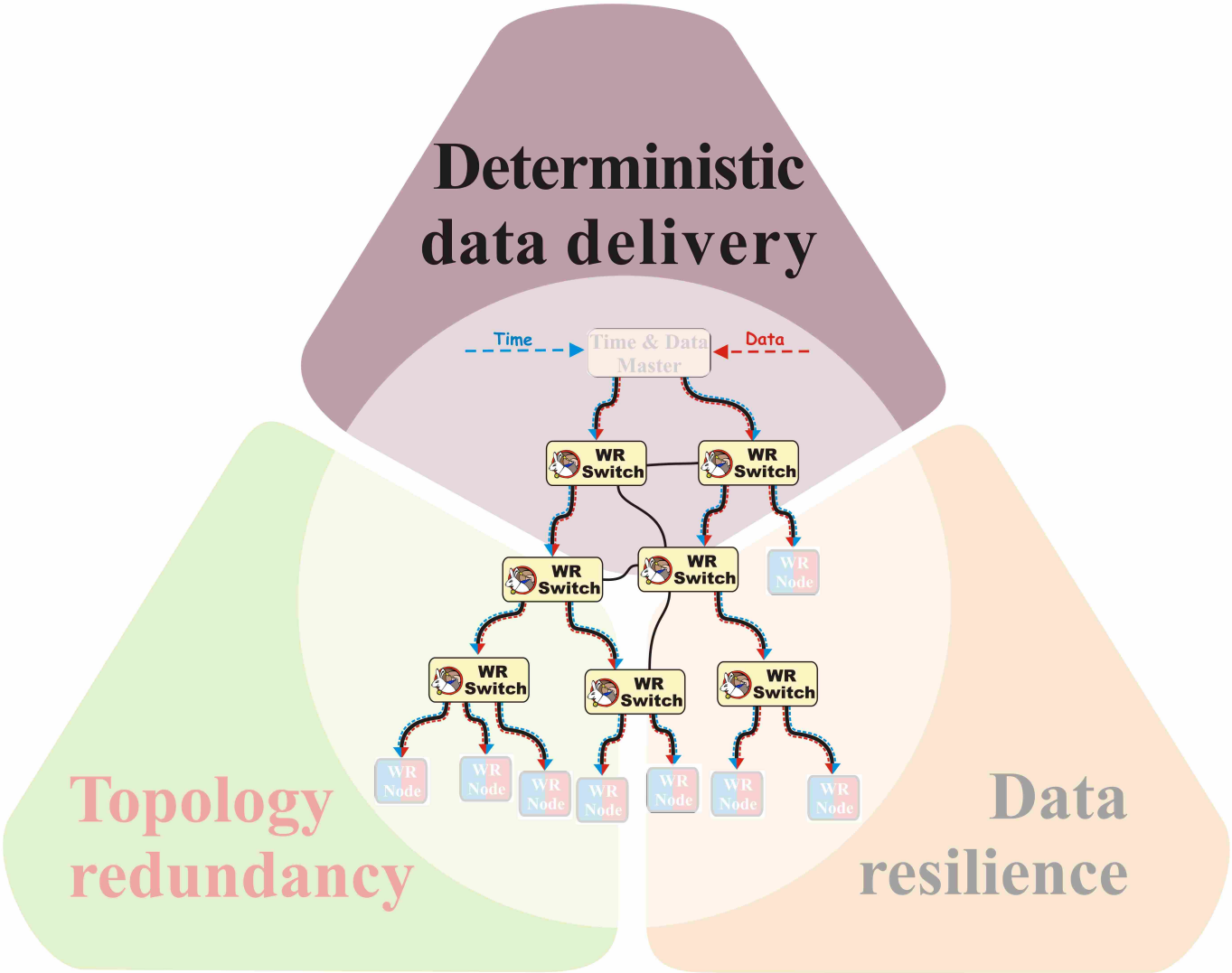

Determinism and Latency

- Deterministic latency of dedicated traffic
  - Based on IEEE 802.1Q
  - By design $<$: 10μs for all sizes, rates
- Tests results of latency: $\approx$ 3μs

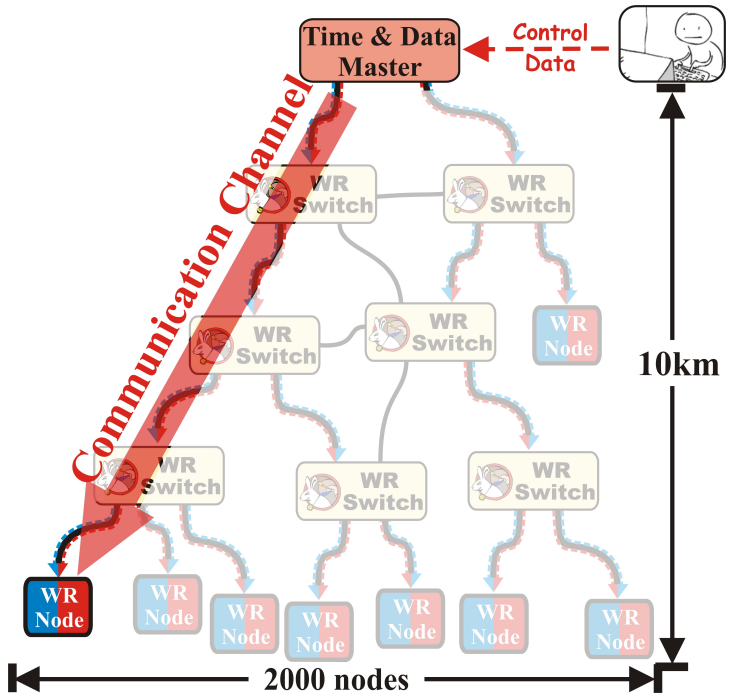

Data redundancy

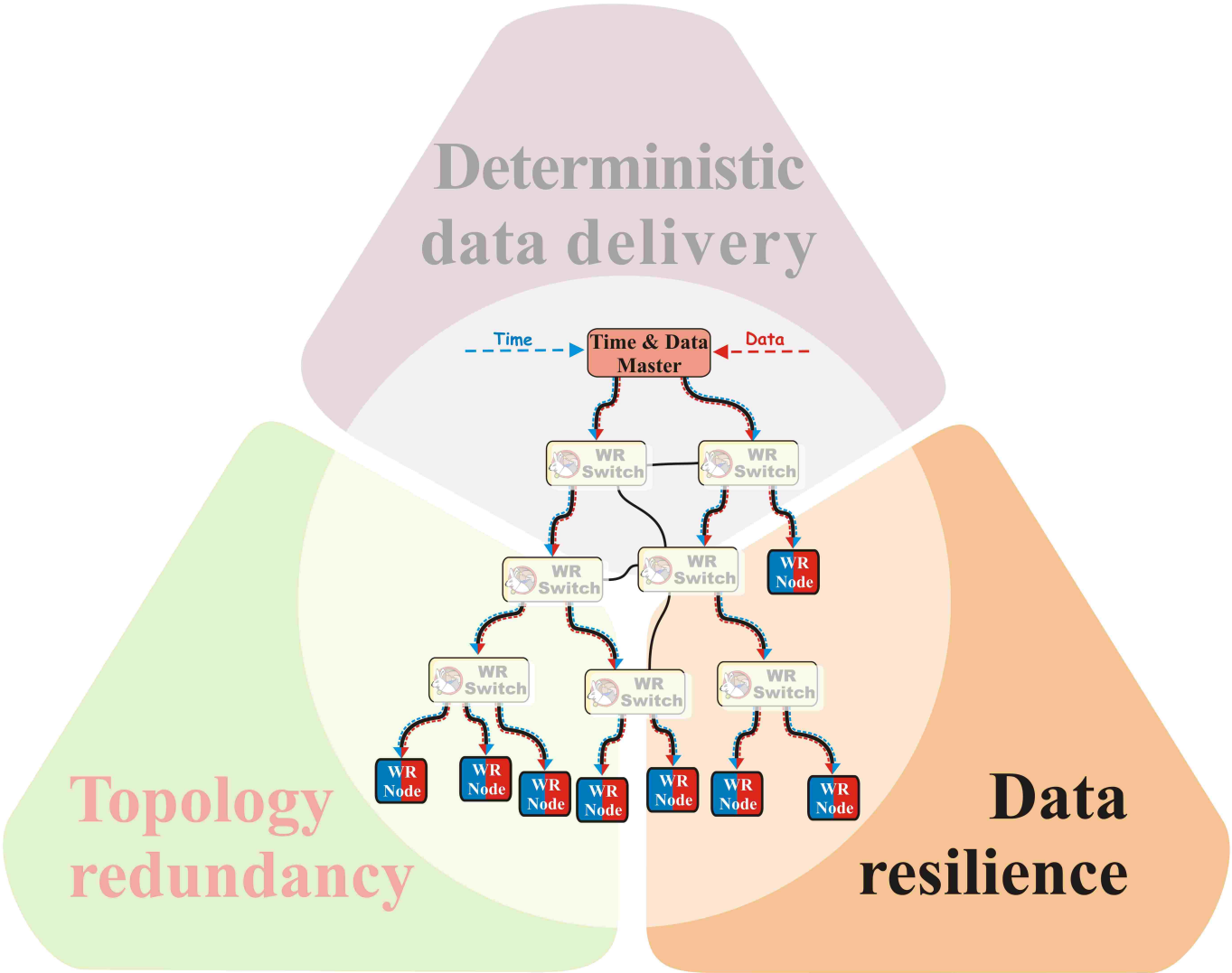

Data redundancy

- **Forward Error Correction (FEC)** – transparent layer:
  - One message encoded into N Ethernet frames
  - Recovery of message from any M (M<N) frames

Data redundancy

- **Forward Error Correction (FEC)** – transparent layer:
  - One message encoded into N Ethernet frames
  - Recovery of message from any M (M<N) frames
- FEC can prevent data loss due to:

Data redundancy

- **Forward Error Correction (FEC)** – transparent layer:
  - One message encoded into N Ethernet frames
  - Recovery of message from any M (M<N) frames
- FEC can prevent data loss due to:
  - **bit error**

Data redundancy

- **Forward Error Correction (FEC)** – transparent layer:
  - One message encoded into N Ethernet frames
  - Recovery of message from any M (M<N) frames
- FEC can prevent data loss due to:
  - **bit error**
  - **network reconfiguration**

Network redundancy

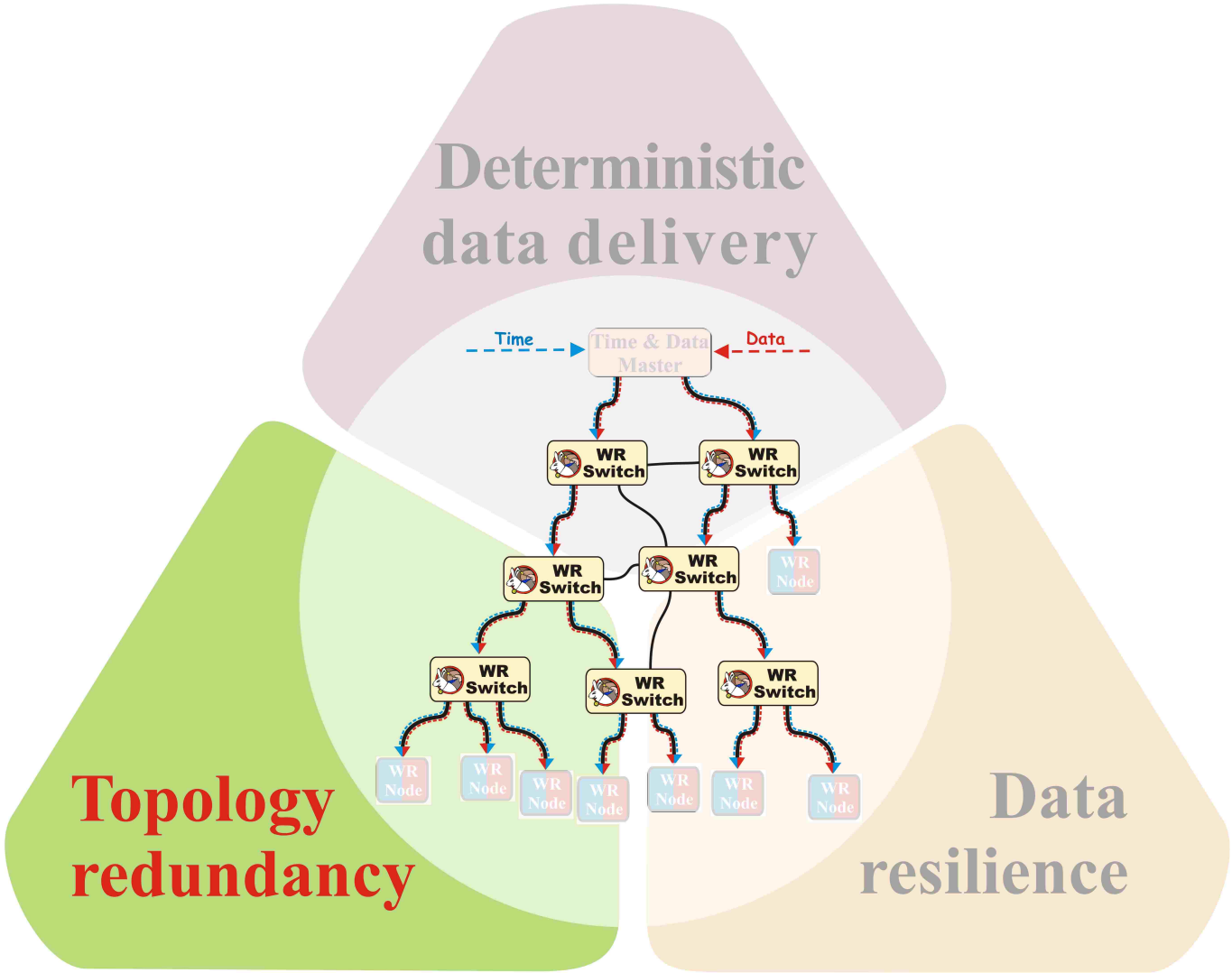

Network redundancy

Hardware support for Ethernet protocols to speed up network reconfiguration from (sub-)seconds to microseconds.

Network redundancy

Hardware support for Ethernet protocols to speed up network reconfiguration from (sub-)seconds to microseconds.

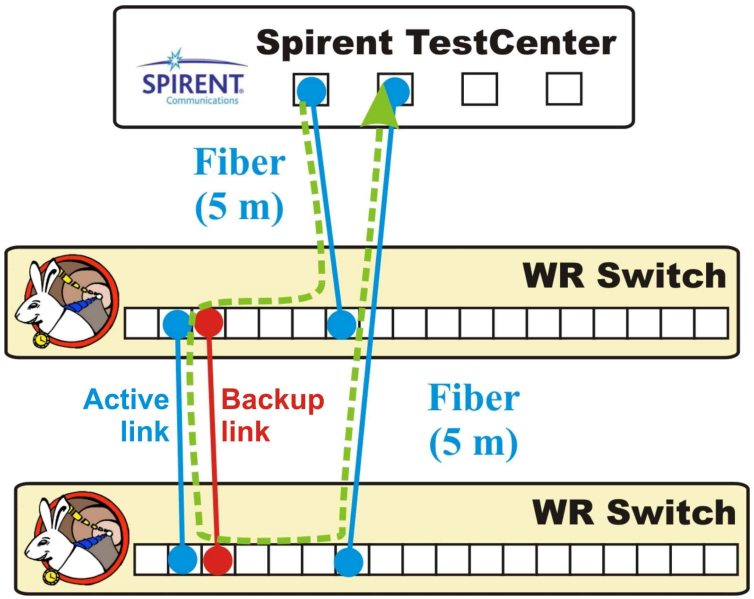

Network redundancy

Hardware support for Ethernet protocols to speed up network reconfiguration from (sub-)seconds to microseconds.

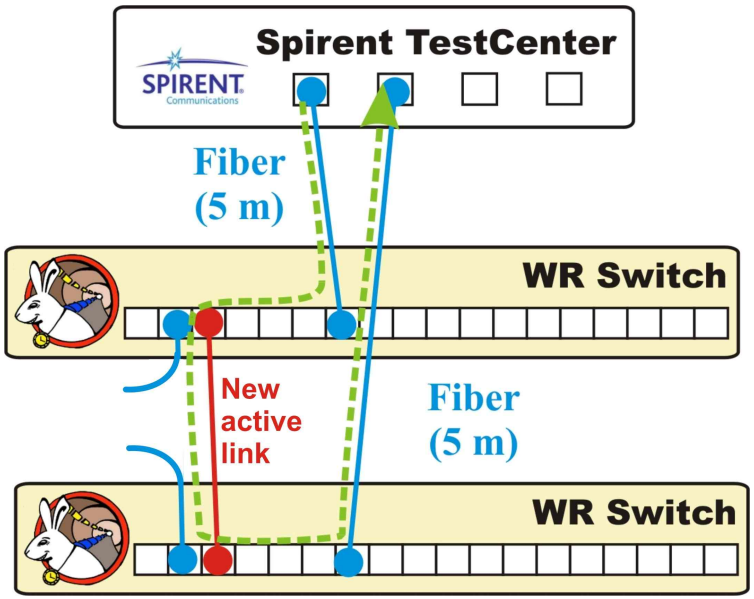

Network redundancy

Hardware support for Ethernet protocols to speed up network reconfiguration from (sub-)seconds to microseconds.

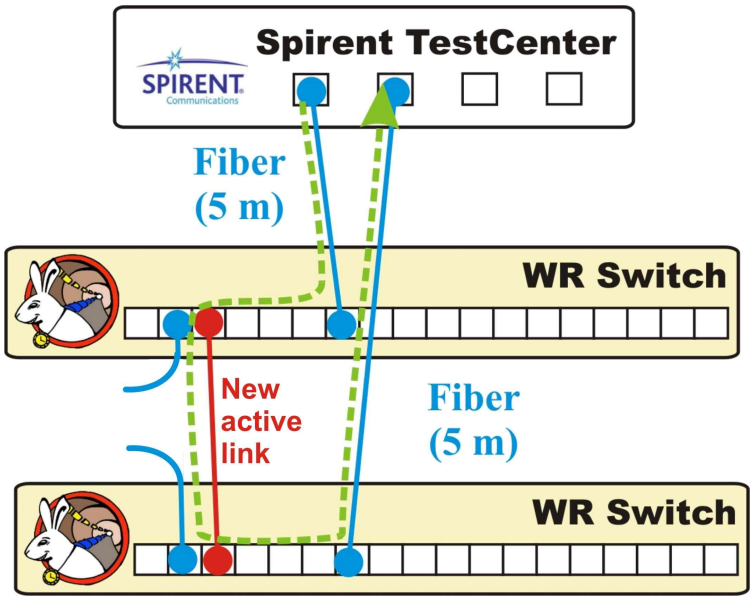

Frame Loss and Latencies

Frame Size (bytes)	Load (%)	Tx Frames	Rx Frames	Frame Loss	Max Latency (uSec)
288	10	1,217,533	1,217,533	0	5.84
288	30	3,652,598	3,652,597	1	5.84
288	50	6,087,663	6,087,663	0	5.84
288	70	8,522,728	8,522,727	1	5.84
288	90	10,957,793	10,957,792	1	6.12

Lost not more than 1 frame during switchover

Network redundancy

Hardware support for Ethernet protocols to speed up network reconfiguration from (sub-)seconds to microseconds.

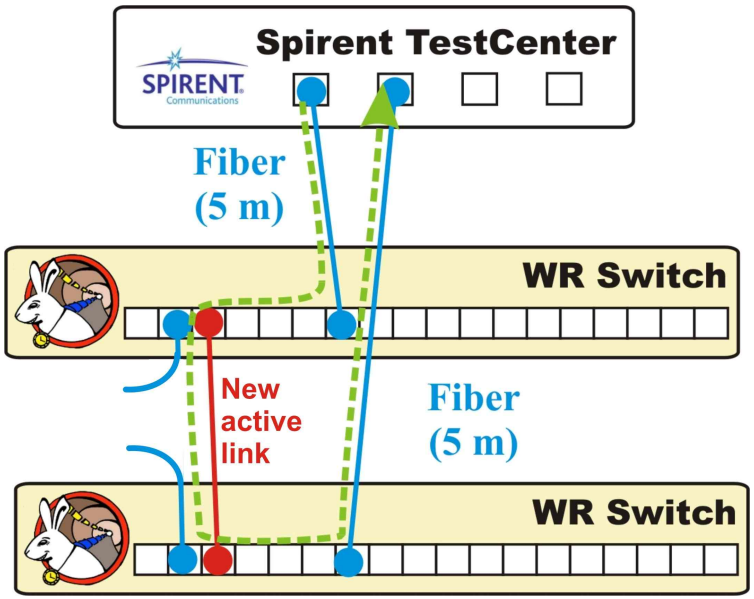

Frame Loss and Latencies

Frame Size (bytes)	Load (%)	Tx Frames	Rx Frames	Frame Loss	Max Latency (uSec)
288	10	1,217,533	1,217,533	0	5.84
288	30	3,652,598	3,652,597	1	5.84
288	50	6,087,663	6,087,663	0	5.84
288	70	8,522,728	8,522,727	1	5.84
288	90	10,957,793	10,957,792	1	6.12

~3GB of data

Lost not more than 1 frame during switchover

Tests and Measurements

Hardware support for Ethernet protocols to speed up network reconfiguration from (sub-)seconds to microseconds.

Rapid Spanning Tree Protocol:

- reconfig time: 1s
- tx in 1s: 100MB = 360k frames

Shortest Path Bridging Protocol

- reconfig time: 50ms
- tx in 50ms: 5MB = 18k frames

Frame Loss and Latencies

Frame Size (bytes)	Load (%)	Tx Frames	Rx Frames	Frame Loss	Max Latency (uSec)
288	10	1,217,533	1,217,533	0	5.84
288	30	3,652,598	3,652,597	1	5.84
288	50	6,087,663	6,087,663	0	5.84
288	70	8,522,728	8,522,727	1	5.84
288	90	10,957,793	10,957,792	1	6.12

~3GB of data

Lost not more than 1 frame during switchover

Outline

1 Introduction to White Rabbit

2 Reliable synchronization

3 Reliable data distribution

4 Conclusions & Future

Conclusions & Future

- Conclusions
  - Tests prove that the developed methods work
  - Triple redundancy is needed to meet CERN requirements
  - Some of the methods are still prove of concept

Conclusions & Future

- Conclusions
  - Tests prove that the developed methods work
  - Triple redundancy is needed to meet CERN requirements
  - Some of the methods are still prove of concept
- Future
  - Integration of time and data solutions
  - Protocol support for time & data topology configuration
  - Implementation of Forward Error Correction (FEC)
  - User-friendly management of robustness features

Thank you

Thank you !