Copyright CERN 2011.
This documentation describes Open Hardware and is licensed under the CERN OHL v. 1.1.

You may redistribute and modify this documentation under the terms of the CERN OHL v.1.1. (http://ohwr.org/cernohl).
This documentation is distributed WITHOUT ANY EXPRESS OR IMPLIED WARRANTY, INCLUDING OF MERCHANTABILITY, SATISFACTORY QUALIT Y AND FITNESS FOR A PARTICULAR PURPOSE.
Please see the CERN OHL v.1.1 for applicable conditions

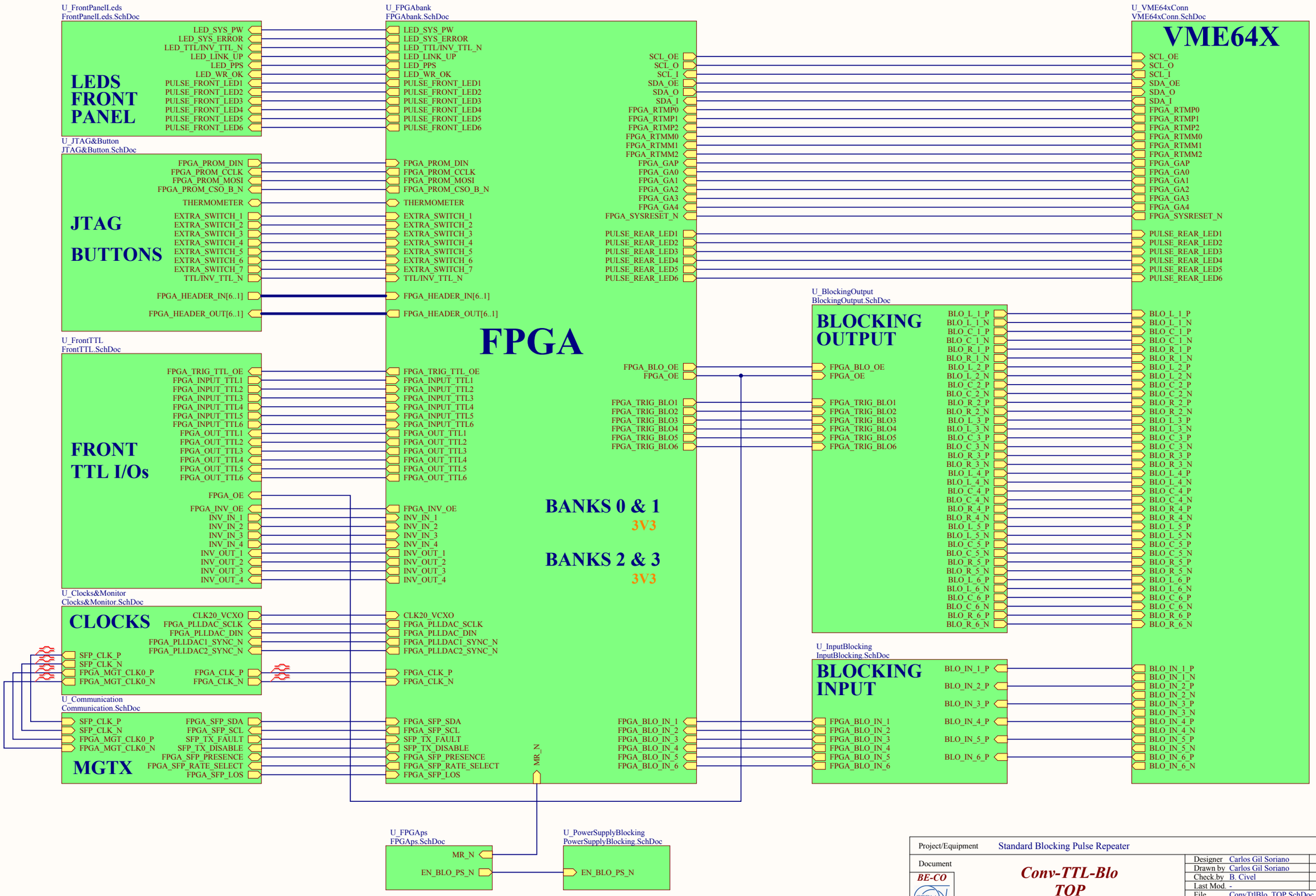

Project/Equipment	Standard Blocking Pulse Repeater		
Document	*Conv-TTL-Blo TOP*	Designer Carlos Gil Soriano	
BE-CO		Drawn by Carlos Gil Soriano	10/10/2011
		Check.by B. Civel	08/12/2011
		Last Mod. -	22/02/2012
		File ConvTtlBlo_TOP.SchDoc	
		Print Date 22/02/2012 13:27:01	Sheet 1 of 36
European Organization for Nuclear Research CH-1211 Genève 23 - Switzerland	EDA-02446-V1-0	Size A3	Rev -

Copyright CERN 2011.
This documentation describes Open Hardware and is licensed under the CERN OHL v. 1.1.

You may redistribute and modify this documentation under the terms of the CERN OHL v.1.1. (http://ohwr.org/cernohl).
This documentation is distributed WITHOUT ANY EXPRESS OR IMPLIED WARRANTY, INCLUDING OF MERCHANTABILITY, SATISFACTORY QUALIT Y AND FITNESS FOR A PARTICULAR PURPOSE.
Please see the CERN OHL v.1.1 for applicable conditions

Efficiency of 85% and better

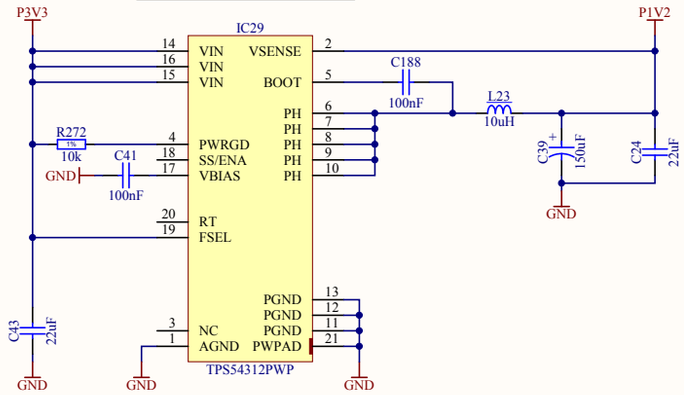

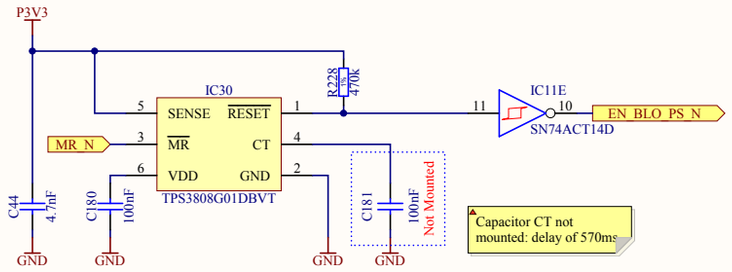

Voltages are:

*** FPGA

VCCO_0	3V3
VCCO_1	3V3
VCCO_2	3V3
VCCO_3	3V3
VCCaux	3V3
VCCint	1V2

*** PROM

VCCaux	3V3

VCCO_int decoupling capacitors

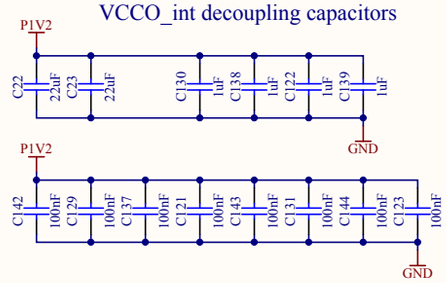

VCCO_0 decoupling capacitors

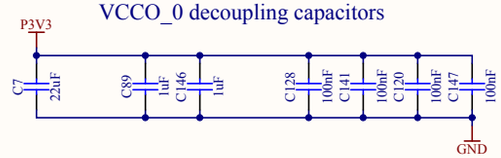

VCCO_1 decoupling capacitors

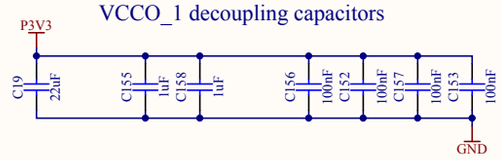

VCCO_2 decoupling capacitors

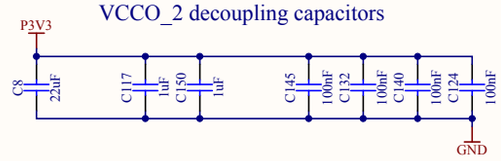

VCCO_3 decoupling capacitors

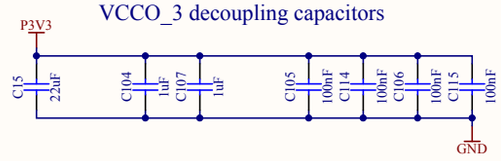

VCCAUX decoupling capacitors

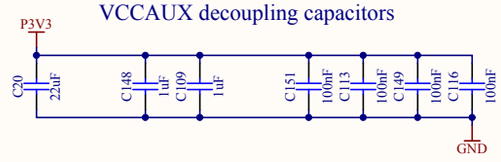

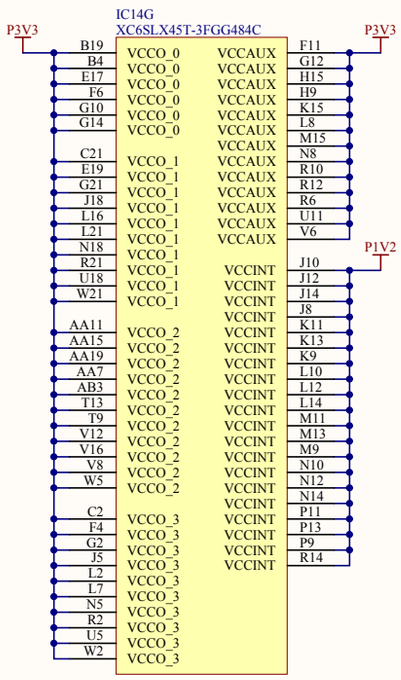

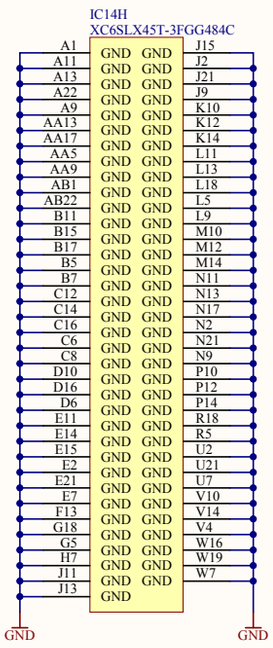

Test points

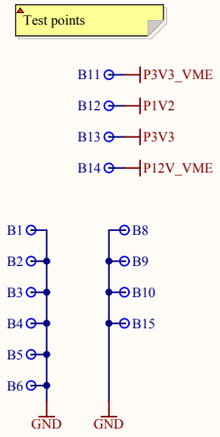

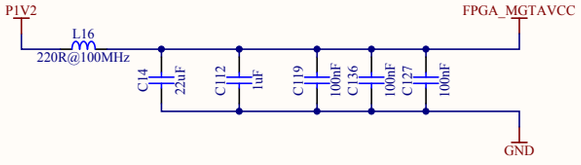

Closer as possible to GTP DUAL pins --bank 0 of FPGA.

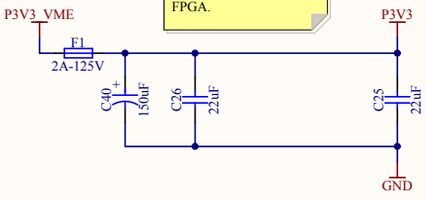

Project/Equipment	Standard Blocking Pulse Repeater		
Document	**Conv-TTL-Blo FPGA PS**	Designer	Carlos Gil Soriano
		Drawn by	Carlos Gil Soriano 10/10/2011
		Check.by	B. Civel 08/12/2011
		Last Mod.	- 22/02/2012
		File	FPGAps.SchDoc
		Print Date	22/02/2012 13:27:01 Sheet 2 of 36
BE-CO	European Organization for Nuclear Research CH-1211 Genève 23 - Switzerland	EDA-02446-V1-0	Size A3 Rev -

Copyright CERN 2011.
This documentation describes Open Hardware and is licensed under the CERN OHL v. 1.1.

You may redistribute and modify this documentation under the terms of the CERN OHL v.1.1. (http://ohwr.org/cernohl).
This documentation is distributed WITHOUT ANY EXPRESS OR IMPLIED WARRANTY, INCLUDING OF MERCHANTABILITY, SATISFACTORY QUALIT Y AND FITNESS FOR A PARTICULAR PURPOSE.
Please see the CERN OHL v.1.1 for applicable conditions

Standard Blocking Voltage

INPUT: 12V
OUTPUT: 24V@2,5A

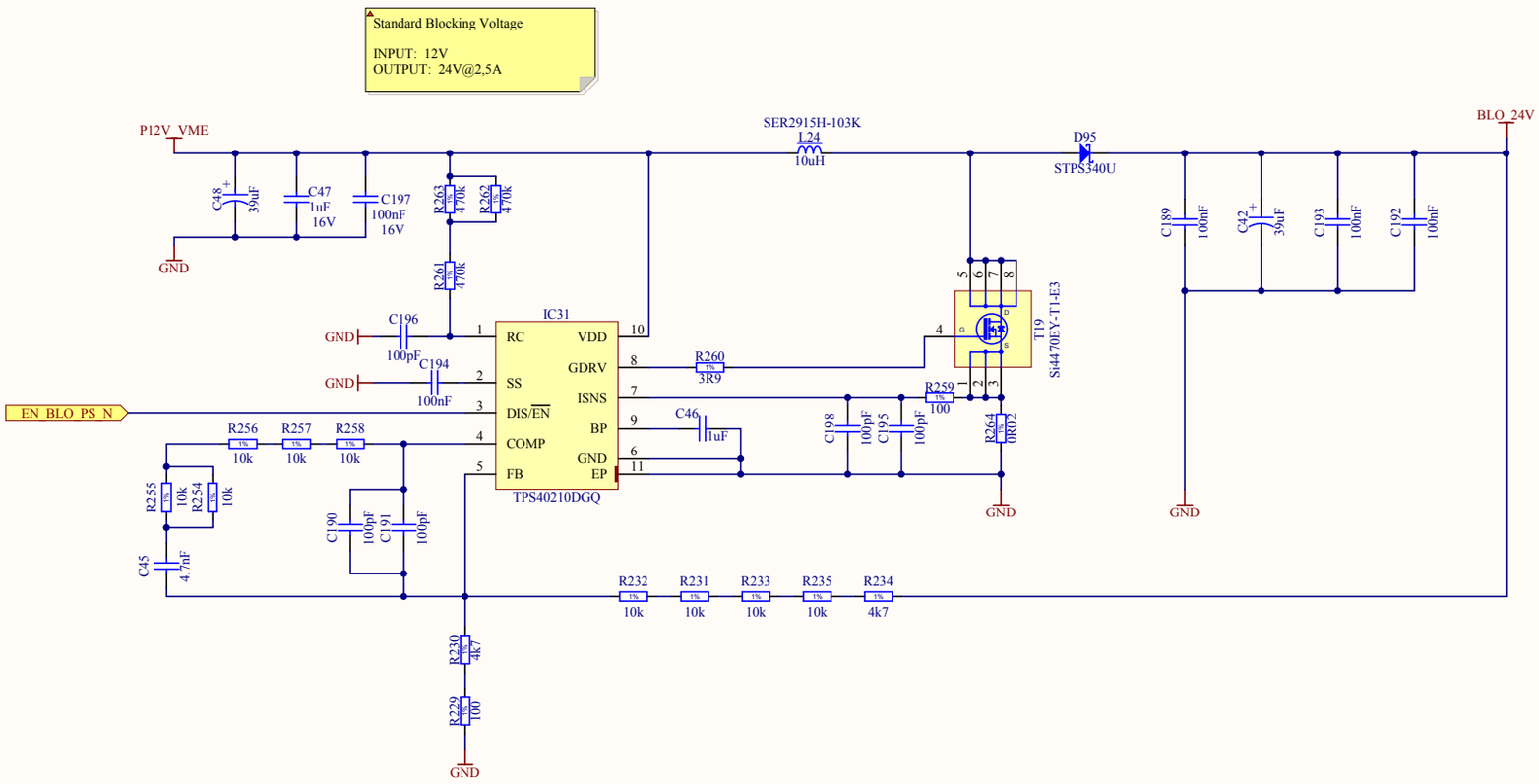

Project/Equipment	Standard Blocking Pulse Repeater
Document	Conv-TTL-Blo BLOCKING PS
Designer	Carlos Gil Soriano
Drawn by	Carlos Gil Soriano 10/10/2011
Check.by	B. Civel 08/12/2011
Last Mod.	- 22/02/2012
File	PowerSupplyBlocking.SchDoc
Print Date	22/02/2012 13:27:01 Sheet 3 of 36
	European Organization for Nuclear Research, CH-1211 Genève 23 - Switzerland
	EDA-02446-V1-0 Size A3 Rev -

Copyright CERN 2011.
This documentation describes Open Hardware and is licensed under the CERN OHL v. 1.1.

You may redistribute and modify this documentation under the terms of the CERN OHL v.1.1. (http://ohwr.org/cernohl).
This documentation is distributed WITHOUT ANY EXPRESS OR IMPLIED WARRANTY, INCLUDING OF MERCHANTABILITY, SATISFACTORY QUALIT Y AND FITNESS FOR A PARTICULAR PURPOSE.
Please see the CERN OHL v.1.1 for applicable conditions

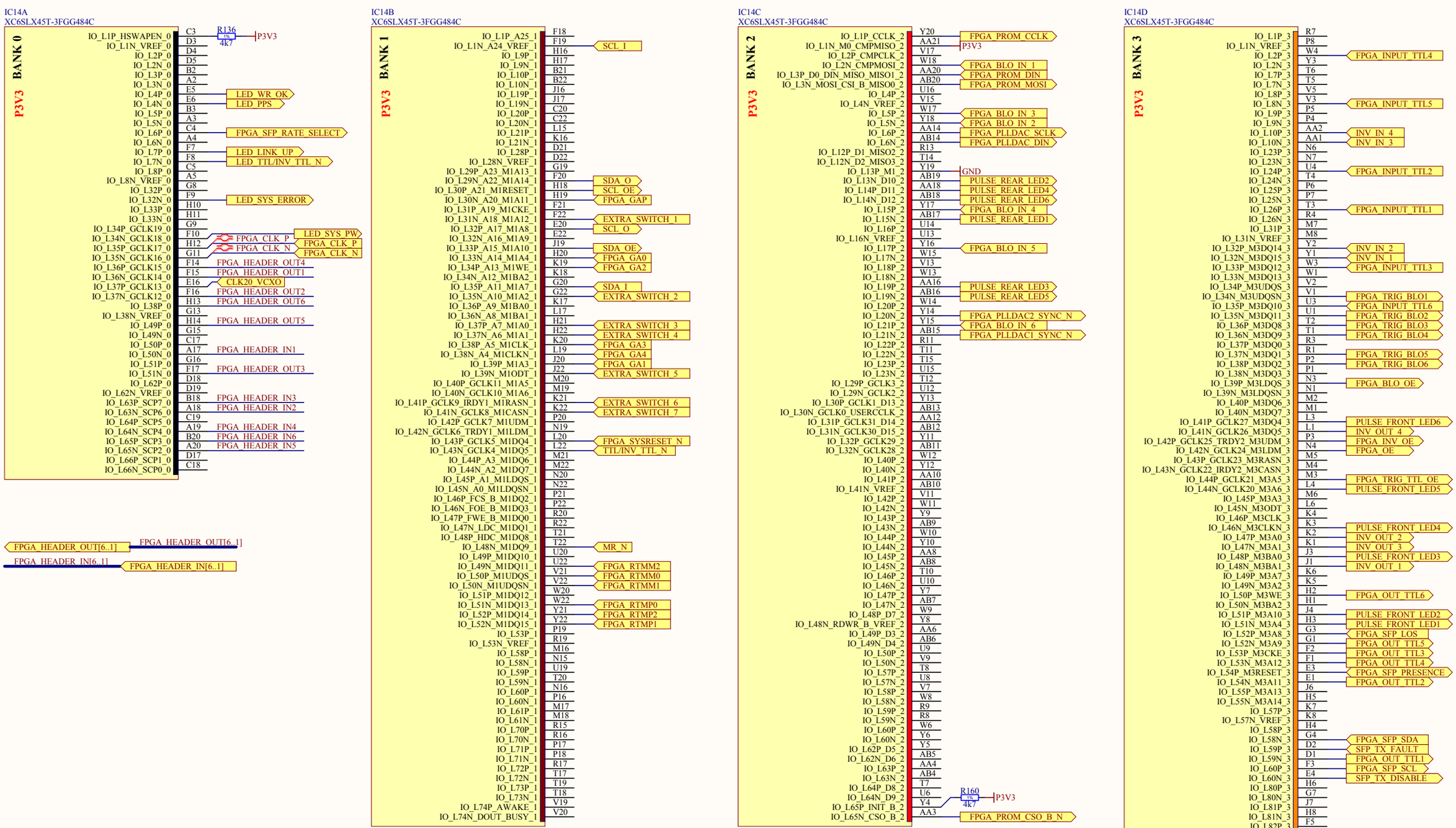

Project/Equipment	Standard Blocking Pulse Repeater
Document	**Conv-TTL-Blo FPGA BANK**
Designer	Carlos Gil Soriano
Drawn by	Carlos Gil Soriano 10/10/2011
Check.by	B. Civel 08/12/2011
Last Mod.	- 22/02/2012
File	FPGAbank.SchDoc
Print Date	22/02/2012 13:27:02
Sheet	4 of 36
Size	A3
Rev	-

BE-CO

European Organization for Nuclear Research
CH-1211 Genève 23 - Switzerland

EDA-02446-V1-0

Copyright CERN 2011.
This documentation describes Open Hardware and is licensed under the CERN OHL v. 1.1.

You may redistribute and modify this documentation under the terms of the CERN OHL v.1.1. (http://ohwr.org/cernohl).
This documentation is distributed WITHOUT ANY EXPRESS OR IMPLIED WARRANTY, INCLUDING OF MERCHANTABILITY, SATISFACTORY QUALIT Y AND FITNESS FOR A PARTICULAR PURPOSE.
Please see the CERN OHL v.1.1 for applicable conditions

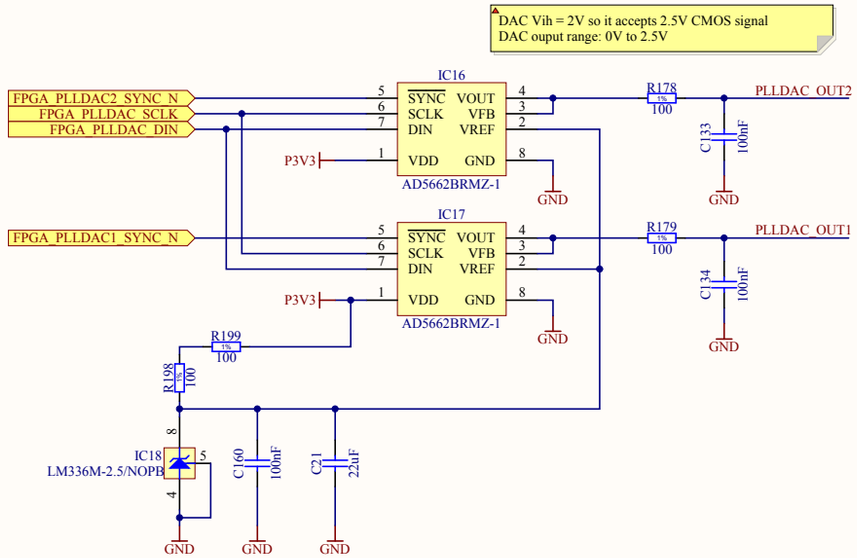

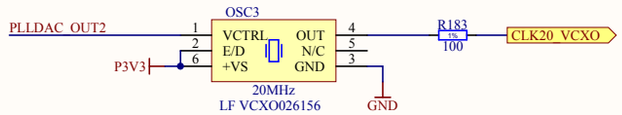

Project/Equipment	Standard Blocking Pulse Repeater		
Document	Conv-TTL-Blo CLOCKS	Designer Carlos Gil Soriano	
BE-CO		Drawn by Carlos Gil Soriano	10/10/2011
		Check.by B. Civel	08/12/2011
		Last Mod. -	22/02/2012
		File Clocks&Monitor.SchDoc	
		Print Date 22/02/2012 13:27:02	Sheet 5 of 36
European Organization for Nuclear Research CH-1211 Genève 23 - Switzerland	EDA-02446-V1-0	Size A3	Rev -

Copyright CERN 2011.
This documentation describes Open Hardware and is licensed under the CERN OHL v. 1.1.

You may redistribute and modify this documentation under the terms of the CERN OHL v.1.1. (http://ohwr.org/cernohl).
This documentation is distributed WITHOUT ANY EXPRESS OR IMPLIED WARRANTY, INCLUDING OF MERCHANTABILITY, SATISFACTORY QUALIT Y AND FITNESS FOR A PARTICULAR PURPOSE.
Please see the CERN OHL v.1.1 for applicable conditions

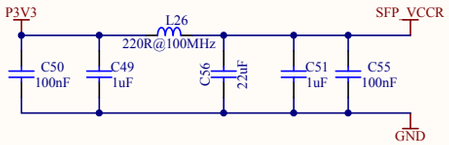

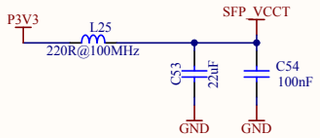

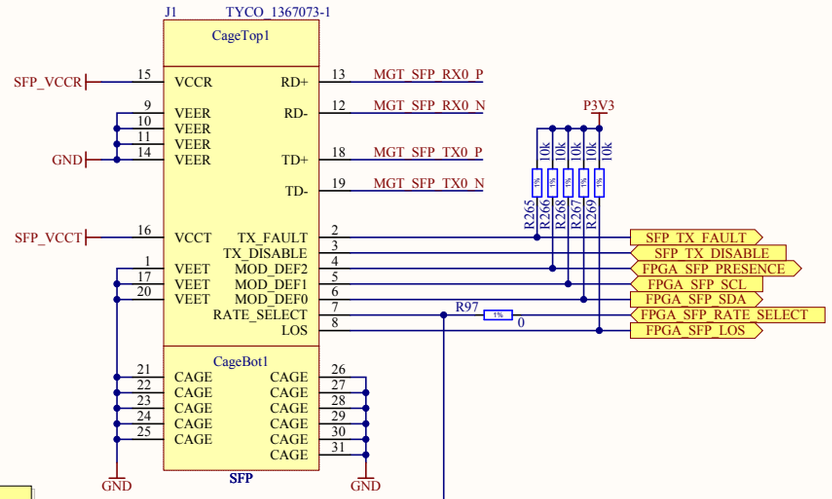

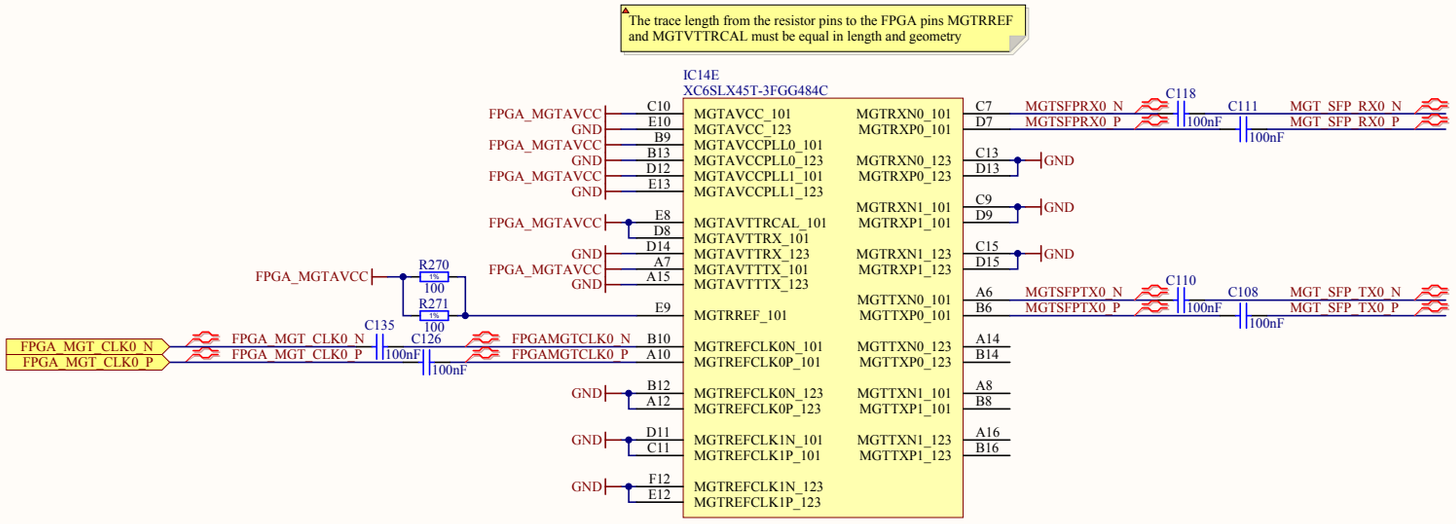

Project/Equipment	Standard Blocking Pulse Repeater		
Document	**Conv-TTL-Blo MGTX**	Designer Carlos Gil Soriano	
		Drawn by Carlos Gil Soriano	10/10/2011
		Check.by B. Civel	08/12/2011
		Last Mod. -	22/02/2012
		File Communication.SchDoc	
		Print Date 22/02/2012 13:27:02	Sheet 6 of 36
BE-CO CERN	European Organization for Nuclear Research CH-1211 Genève 23 - Switzerland	EDA-02446-V1-0	Size A3 / Rev -

Copyright CERN 2011.
This documentation describes Open Hardware and is licensed under the CERN OHL v. 1.1.

You may redistribute and modify this documentation under the terms of the CERN OHL v.1.1. (http://ohwr.org/cernohl).
This documentation is distributed WITHOUT ANY EXPRESS OR IMPLIED WARRANTY, INCLUDING OF MERCHANTABILITY, SATISFACTORY QUALIT Y AND FITNESS FOR A PARTICULAR PURPOSE.
Please see the CERN OHL v.1.1 for applicable conditions

Thermometer will be used to have a FPGA unique ID

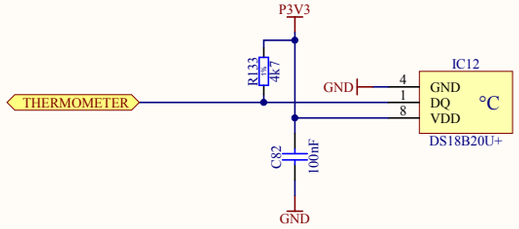

RFU switch

TTL/INV_TTL_N

This is used to determine the level of the input trigger connector

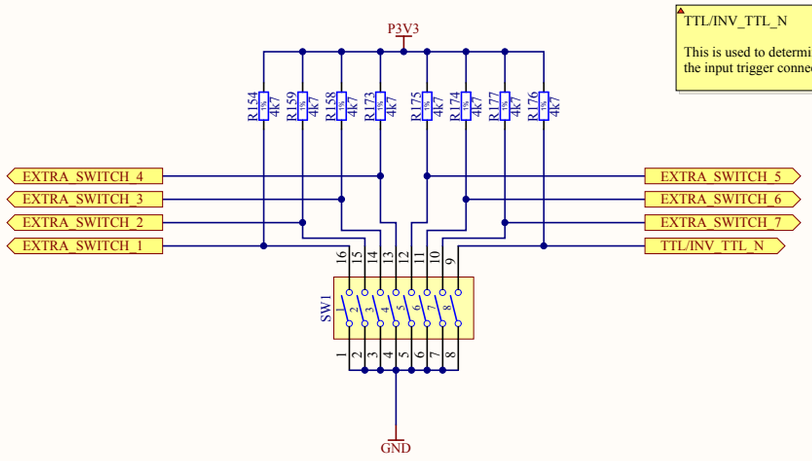

PROM MEMORY

W_N is 1 to allow writes in the memory

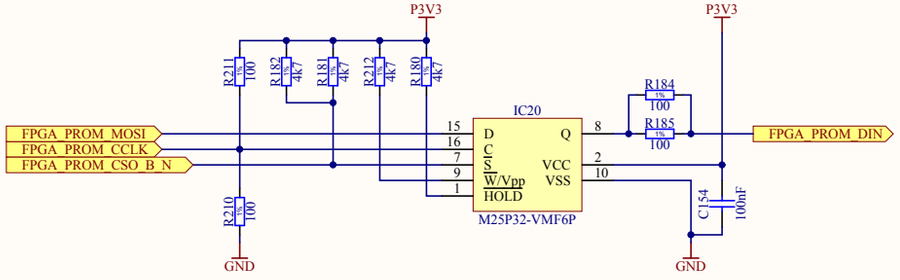

PROGRAM_B must be asserted low for more than 500ns

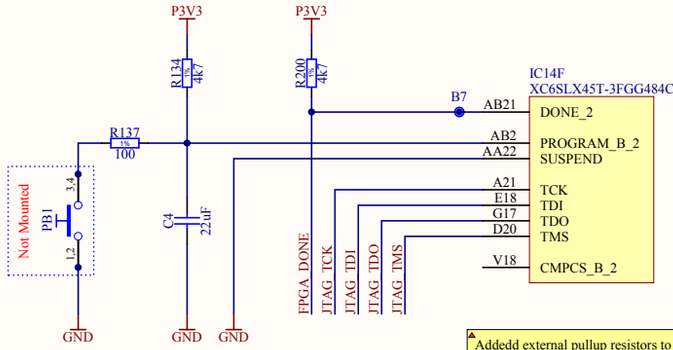

Addeded external pullup resistors to pins TDI and TMS as recommended in Xilinx's answer response 11433
However as the JTAG TAP controller fsm is in reset always that TMS experiences two consecutives ones, we can leave it pulled up.
UG380 pg56: the four JTAG pins are internally pulled up.
Hence, there's no need of external ones.

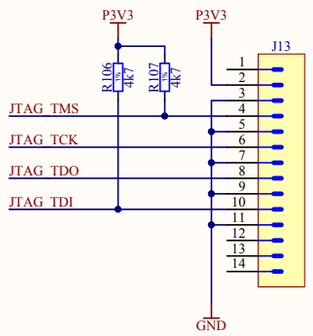

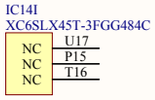

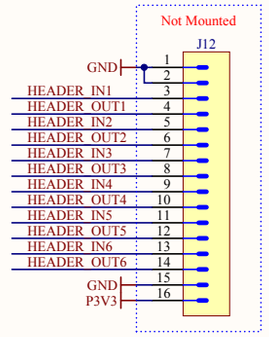

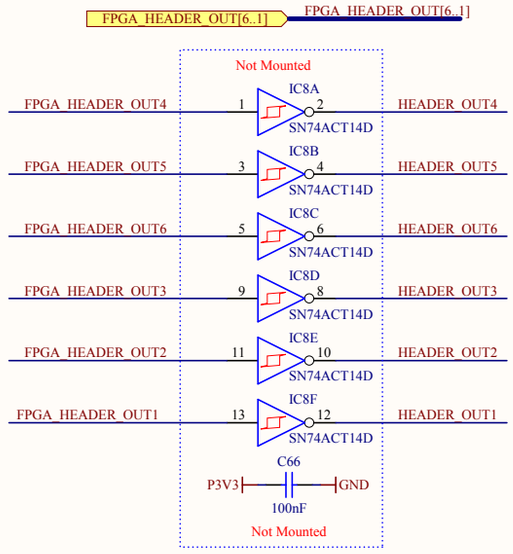

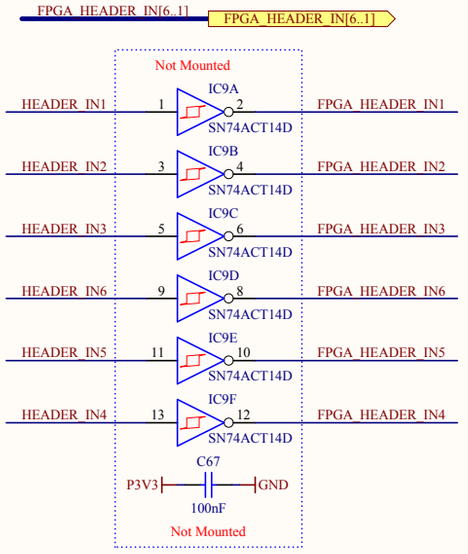

Project/Equipment	Standard Blocking Pulse Repeater		
Document	**Conv-TTL-Blo JTAG**	Designer	Carlos Gil Soriano
		Drawn by	Carlos Gil Soriano 10/10/2011
		Check.by	B. Civel 08/12/2011
		Last Mod.	- 22/02/2012
		File	JTAG&Button.SchDoc
		Print Date	22/02/2012 13:27:03 Sheet 7 of 36
BE-CO	*European Organization for Nuclear Research CH-1211 Genève 23 - Switzerland*	EDA-02446-V1-0	Size A3 Rev -

Copyright CERN 2011.
This documentation describes Open Hardware and is licensed under the CERN OHL v. 1.1.

You may redistribute and modify this documentation under the terms of the CERN OHL v.1.1. (http://ohwr.org/cernohl).
This documentation is distributed WITHOUT ANY EXPRESS OR IMPLIED WARRANTY, INCLUDING OF MERCHANTABILITY, SATISFACTORY QUALIT Y AND FITNESS FOR A PARTICULAR PURPOSE.
Please see the CERN OHL v.1.1 for applicable conditions

Utility Bus Signal: see page 199
ANSI/VITA 1-1994

Output configurations in page 230

ACFAIL_N	Open collector
SYSFAIL_N	Open collector
SYSRESET_N	Open collector
SYSCLK	Totem-pole

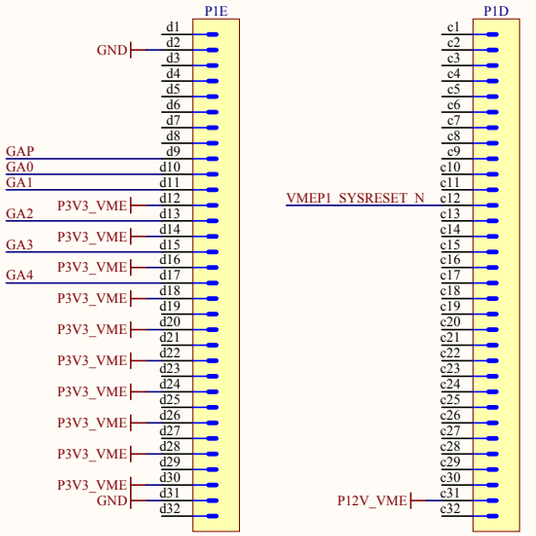

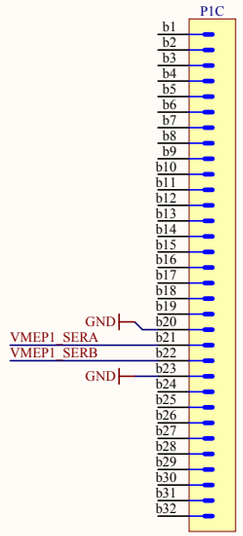

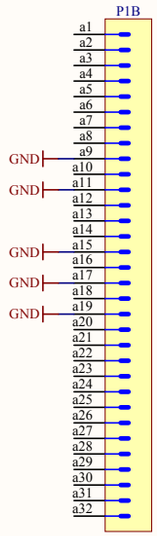

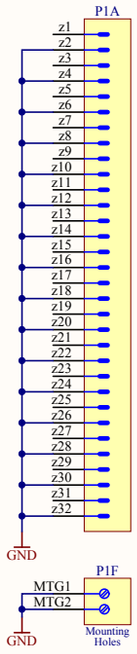

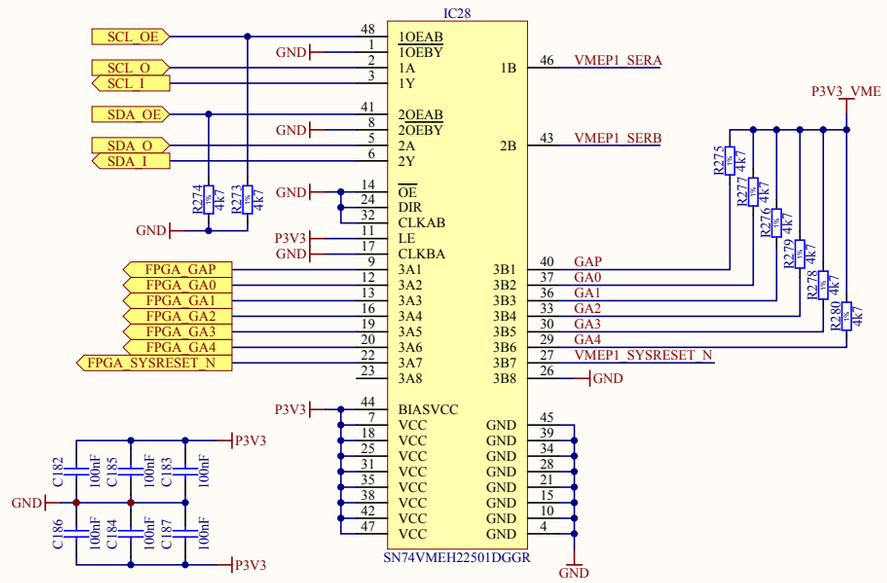

As each block of BLO+_{X}_n, where X={L, C, R} will be triggered at the same time, cross talk should not be so critical. However, it would be better group the signals as it is shown and leave ground between sets of signals triggered by different sources.

As input signals come from far away, the spectrum of this signal will have less high frequency components that the spectrum of the generated Standard Blocking in conv-ttl-blo
Signals with more spectral power in higher frequencies should be routed more carefully,so it is better to leave the easiest paths to them.
In this case, outer pins should be available for output signals and inner pins to input ones.

As can be seen in ANSI/VITA 1-1994 page 247, the row b is used in VME64. Hence, none of its pins can be used.
Rows z,a,c,d have available pins as documented in the VME64 and VME64x specifications.

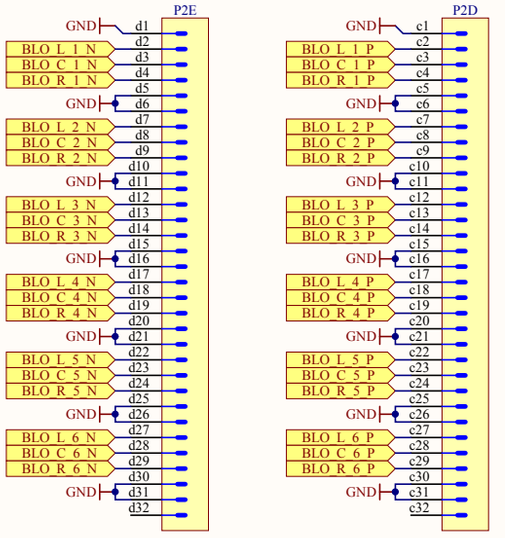

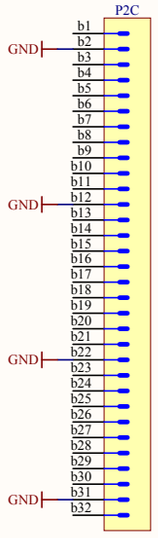

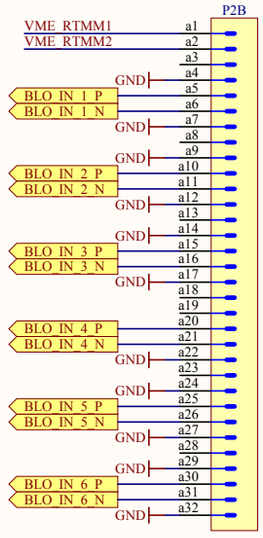

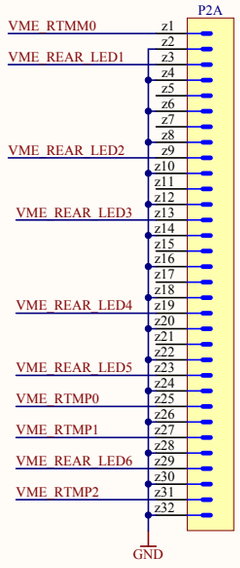

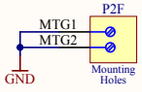

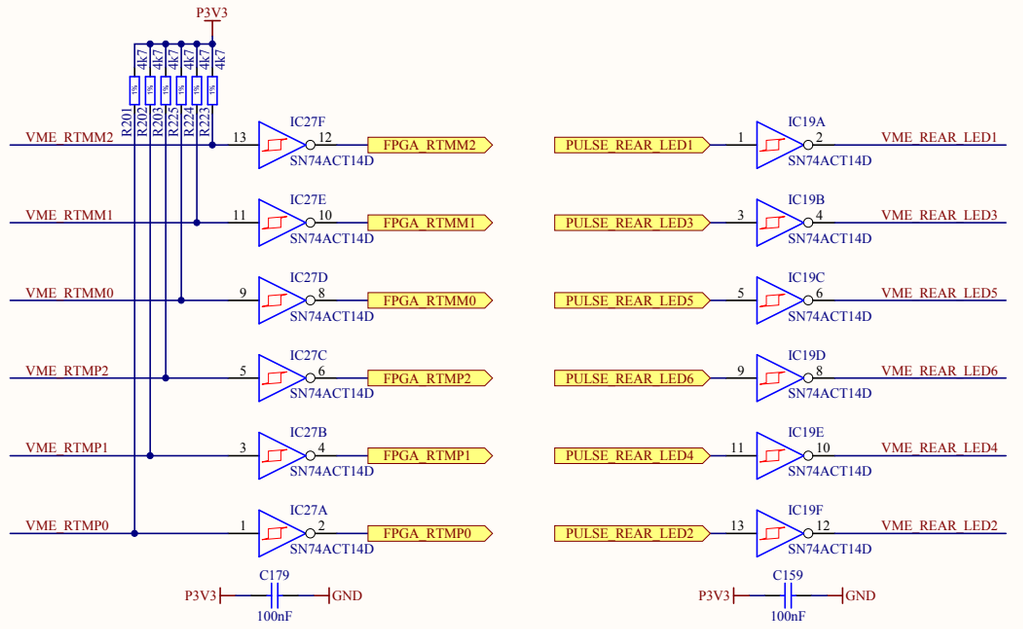

Project/Equipment	Standard Blocking Pulse Repeater		
Document	Conv-TTL-Blo VME64X	Designer Carlos Gil Soriano	
		Drawn by Carlos Gil Soriano	10/10/2011
		Check.by B. Civel	08/12/2011
		Last Mod. -	22/02/2012
		File VME64xConn.SchDoc	
		Print Date 22/02/2012 13:27:03	Sheet 8 of 36
European Organization for Nuclear Research CH-1211 Genève 23 - Switzerland	EDA-02446-V1-0	Size A3	Rev -

Copyright CERN 2011.
This documentation describes Open Hardware and is licensed under the CERN OHL v. 1.1.

You may redistribute and modify this documentation under the terms of the CERN OHL v.1.1. (http://ohwr.org/cernohl).
This documentation is distributed WITHOUT ANY EXPRESS OR IMPLIED WARRANTY, INCLUDING OF MERCHANTABILITY, SATISFACTORY QUALIT Y AND FITNESS FOR A PARTICULAR PURPOSE.
Please see the CERN OHL v.1.1 for applicable conditions

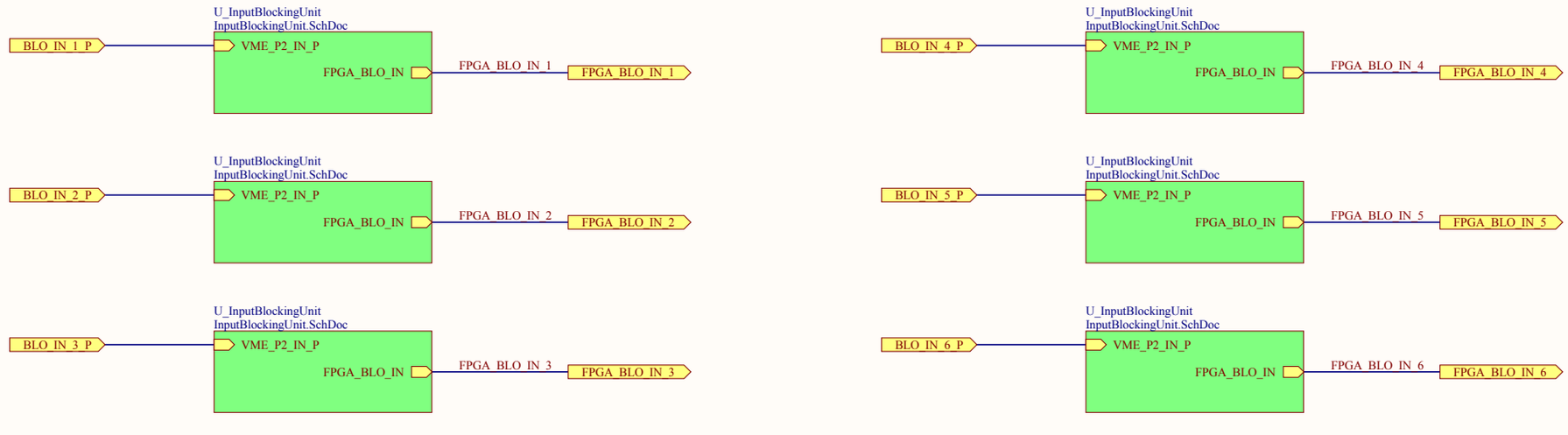

Project/Equipment	Standard Blocking Pulse Repeater		
Document	***Conv-TTL-Blo***	Designer Carlos Gil Soriano	
	INPUT BLO	Drawn by Carlos Gil Soriano	10/10/2011
		Check.by B. Civel	08/12/2011
		Last Mod. -	22/02/2012
		File InputBlocking.SchDoc	
		Print Date 22/02/2012 13:27:03	Sheet 9 of 36
European Organization for Nuclear Research *CH-1211 Genève 23 - Switzerland*	EDA-02446-V1-0	Size A3	Rev -

Copyright CERN 2011.
This documentation describes Open Hardware and is licensed under the CERN OHL v. 1.1.

You may redistribute and modify this documentation under the terms of the CERN OHL v.1.1. (http://ohwr.org/cernohl).
This documentation is distributed WITHOUT ANY EXPRESS OR IMPLIED WARRANTY, INCLUDING OF MERCHANTABILITY, SATISFACTORY QUALIT Y AND FITNESS FOR A PARTICULAR PURPOSE.
Please see the CERN OHL v.1.1 for applicable conditions

Input waveforms:
nominal 24V Std.Blocking
minimum 4V Std.Blocking

high pass knee frequency: 170 KHz

Minimum isolation voltage: 3750 V

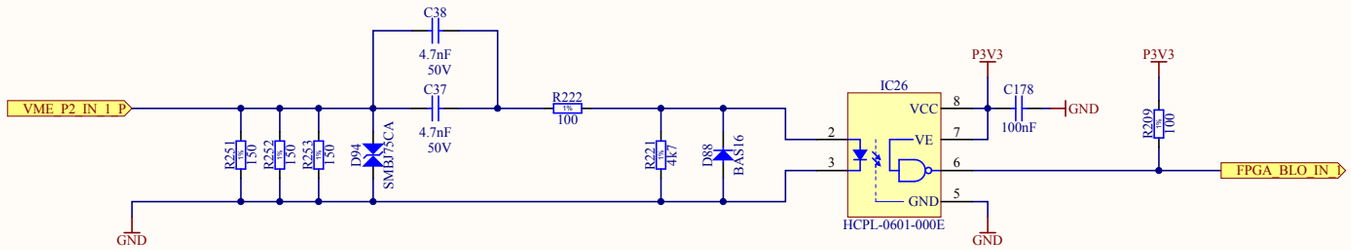

Project/Equipment	Standard Blocking Pulse Repeater
Document	Conv-TTL-Blo INPUT UNIT
Designer	Carlos Gil Soriano
Drawn by	Carlos Gil Soriano 10/10/2011
Check by	B. Civel 08/12/2011
Last Mod.	- 22/02/2012
File	InputBlockingUnit.SchDoc
Print Date	22/02/2012 13:27:04
Sheet	10 of 36
Size	A3
Rev	-

BE-CO

European Organization for Nuclear Research
CH-1211 Genève 23 - Switzerland

EDA-02446-V1-0

Copyright CERN 2011.
This documentation describes Open Hardware and is licensed under the CERN OHL v. 1.1.

You may redistribute and modify this documentation under the terms of the CERN OHL v.1.1. (http://ohwr.org/cernohl).
This documentation is distributed WITHOUT ANY EXPRESS OR IMPLIED WARRANTY, INCLUDING OF MERCHANTABILITY, SATISFACTORY QUALIT Y AND FITNESS FOR A PARTICULAR PURPOSE.
Please see the CERN OHL v.1.1 for applicable conditions

Input waveforms:
nominal 24V Std.Blocking
minimum 4V Std.Blocking

high pass knee frequency: 170 KHz

Minimum isolation voltage: 3750 V

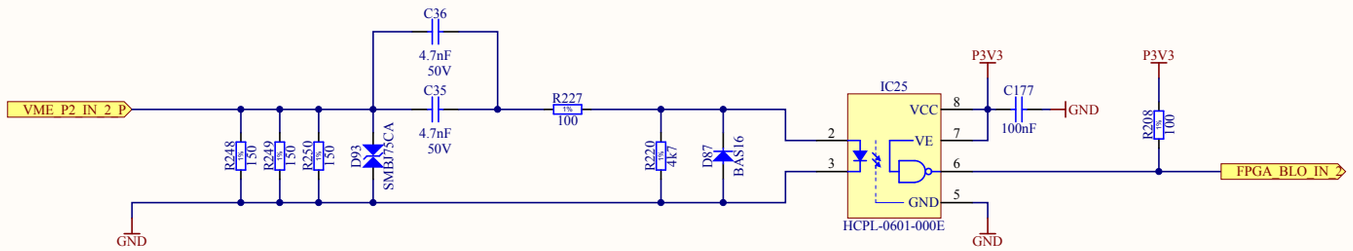

Project/Equipment	Standard Blocking Pulse Repeater
Document	Conv-TTL-Blo INPUT UNIT
Designer	Carlos Gil Soriano
Drawn by	Carlos Gil Soriano 10/10/2011
Check by	B. Civel 08/12/2011
Last Mod.	- 22/02/2012
File	InputBlockingUnit.SchDoc
Print Date	22/02/2012 13:27:04
Sheet	10 of 36
Size	A3
Rev	-

BE-CO

European Organization for Nuclear Research
CH-1211 Genève 23 - Switzerland

EDA-02446-V1-0

Copyright CERN 2011.
This documentation describes Open Hardware and is licensed under the CERN OHL v. 1.1.

You may redistribute and modify this documentation under the terms of the CERN OHL v.1.1. (http://ohwr.org/cernohl).
This documentation is distributed WITHOUT ANY EXPRESS OR IMPLIED WARRANTY, INCLUDING OF MERCHANTABILITY, SATISFACTORY QUALIT Y AND FITNESS FOR A PARTICULAR PURPOSE.
Please see the CERN OHL v.1.1 for applicable conditions

Input waveforms:
nominal 24V Std.Blocking
minimum 4V Std.Blocking

high pass knee frequency: 170 KHz

Minimum isolation voltage: 3750 V

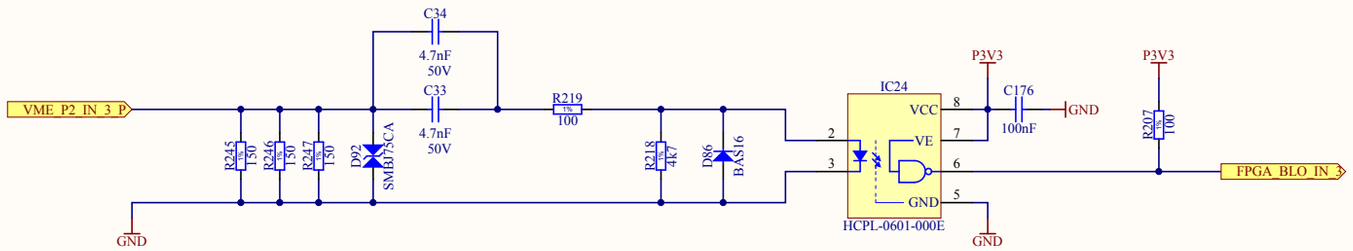

Project/Equipment	Standard Blocking Pulse Repeater
Document	Conv-TTL-Blo INPUT UNIT
Designer	Carlos Gil Soriano
Drawn by	Carlos Gil Soriano 10/10/2011
Check by	B. Civel 08/12/2011
Last Mod.	- 22/02/2012
File	InputBlockingUnit.SchDoc
Print Date	22/02/2012 13:27:04
Sheet	10 of 36
Size	A3
Rev	-

BE-CO

European Organization for Nuclear Research
CH-1211 Genève 23 - Switzerland

EDA-02446-V1-0

Copyright CERN 2011.
This documentation describes Open Hardware and is licensed under the CERN OHL v. 1.1.

You may redistribute and modify this documentation under the terms of the CERN OHL v.1.1. (http://ohwr.org/cernohl).
This documentation is distributed WITHOUT ANY EXPRESS OR IMPLIED WARRANTY, INCLUDING OF MERCHANTABILITY, SATISFACTORY QUALIT Y AND FITNESS FOR A PARTICULAR PURPOSE.
Please see the CERN OHL v.1.1 for applicable conditions

Input waveforms:
nominal 24V Std.Blocking
minimum 4V Std.Blocking

high pass knee frequency: 170 KHz

Minimum isolation voltage: 3750 V

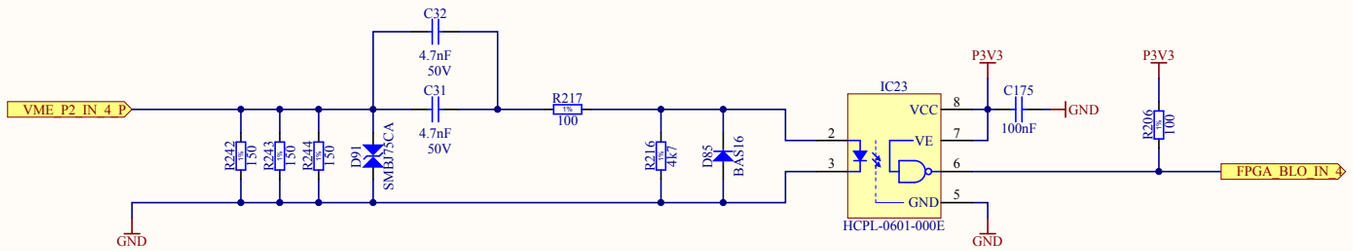

Project/Equipment	Standard Blocking Pulse Repeater		
Document	Conv-TTL-Blo INPUT UNIT	Designer Carlos Gil Soriano	
		Drawn by Carlos Gil Soriano	10/10/2011
		Check by B. Civel	08/12/2011
		Last Mod. -	22/02/2012
		File InputBlockingUnit.SchDoc	
		Print Date 22/02/2012 13:27:05	Sheet 10.4 of 36
BE-CO	European Organization for Nuclear Research CH-1211 Genève 23 - Switzerland	EDA-02446-V1-0	Size A3 / Rev -

Copyright CERN 2011.
This documentation describes Open Hardware and is licensed under the CERN OHL v. 1.1.

You may redistribute and modify this documentation under the terms of the CERN OHL v.1.1. (http://ohwr.org/cernohl).
This documentation is distributed WITHOUT ANY EXPRESS OR IMPLIED WARRANTY, INCLUDING OF MERCHANTABILITY, SATISFACTORY QUALIT Y AND FITNESS FOR A PARTICULAR PURPOSE.
Please see the CERN OHL v.1.1 for applicable conditions

Input waveforms:
nominal 24V Std.Blocking
minimum 4V Std.Blocking

high pass knee frequency: 170 KHz

Minimum isolation voltage: 3750 V

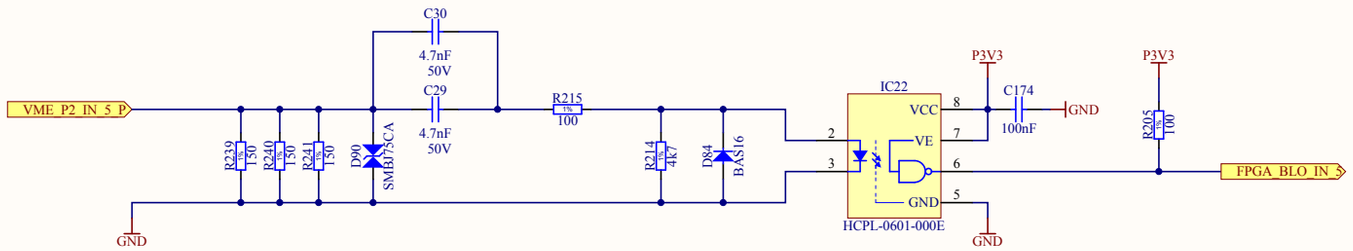

Project/Equipment	Standard Blocking Pulse Repeater
Document	Conv-TTL-Blo INPUT UNIT
Designer	Carlos Gil Soriano
Drawn by	Carlos Gil Soriano 10/10/2011
Check by	B. Civel 08/12/2011
Last Mod.	- 22/02/2012
File	InputBlockingUnit.SchDoc
Print Date	22/02/2012 13:27:05
Sheet	10.5of 36
Size	A3
Rev	-

BE-CO

European Organization for Nuclear Research
CH-1211 Genève 23 - Switzerland

EDA-02446-V1-0

Copyright CERN 2011.
This documentation describes Open Hardware and is licensed under the CERN OHL v. 1.1.

You may redistribute and modify this documentation under the terms of the CERN OHL v.1.1. (http://ohwr.org/cernohl).
This documentation is distributed WITHOUT ANY EXPRESS OR IMPLIED WARRANTY, INCLUDING OF MERCHANTABILITY, SATISFACTORY QUALIT Y AND FITNESS FOR A PARTICULAR PURPOSE.
Please see the CERN OHL v.1.1 for applicable conditions

Input waveforms:
nominal 24V Std.Blocking
minimum 4V Std.Blocking

high pass knee frequency: 170 KHz

Minimum isolation voltage: 3750 V

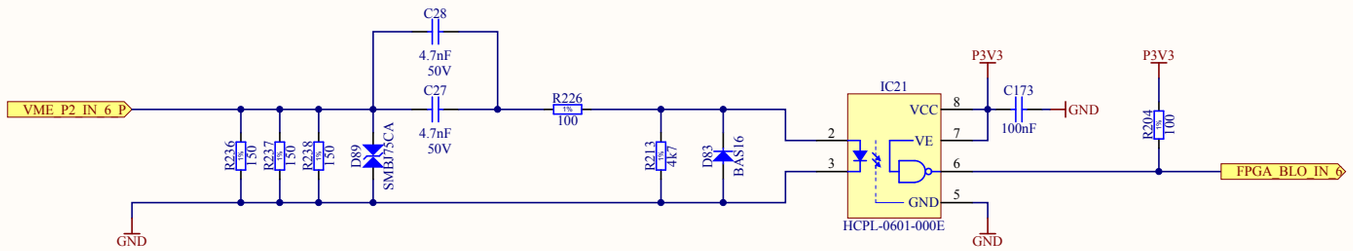

Project/Equipment	Standard Blocking Pulse Repeater
Document	Conv-TTL-Blo INPUT UNIT
Designer	Carlos Gil Soriano
Drawn by	Carlos Gil Soriano 10/10/2011
Check by	B. Civel 08/12/2011
Last Mod.	- 22/02/2012
File	InputBlockingUnit.SchDoc
Print Date	22/02/2012 13:27:05
Sheet	10 of 36
Size	A3
Rev	-

BE-CO

European Organization for Nuclear Research
CH-1211 Genève 23 - Switzerland

EDA-02446-V1-0

Copyright CERN 2011.
This documentation describes Open Hardware and is licensed under the CERN OHL v. 1.1.

You may redistribute and modify this documentation under the terms of the CERN OHL v.1.1. (http://ohwr.org/cernohl).
This documentation is distributed WITHOUT ANY EXPRESS OR IMPLIED WARRANTY, INCLUDING OF MERCHANTABILITY, SATISFACTORY QUALIT Y AND FITNESS FOR A PARTICULAR PURPOSE.
Please see the CERN OHL v.1.1 for applicable conditions

Antiglitch measures:

if ANTIGLITCH_OE_N is high the output is high impedance. Then, the pull-down resistors do the rest.

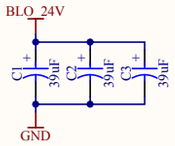

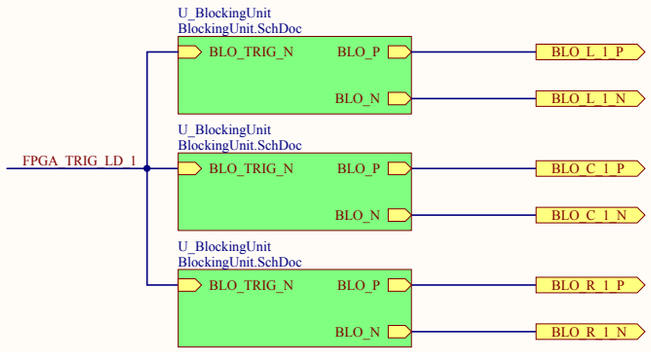

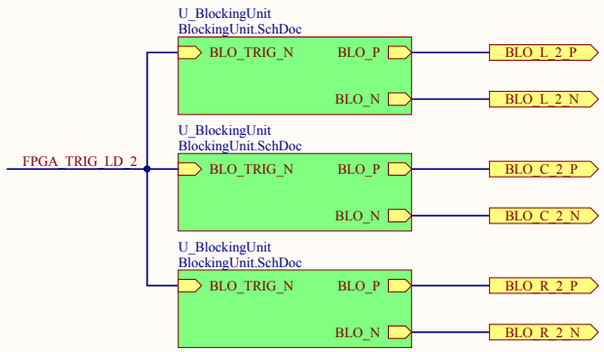

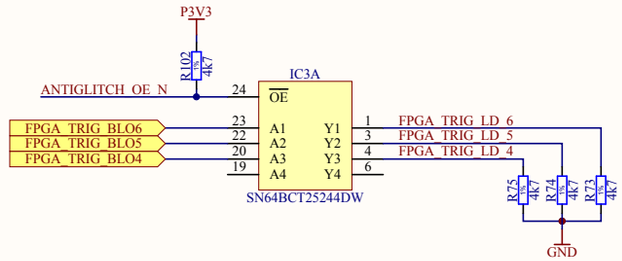

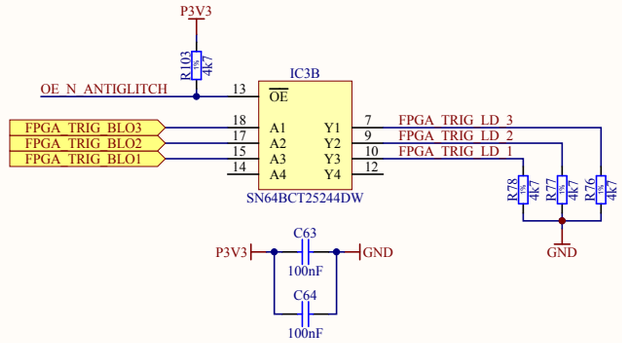

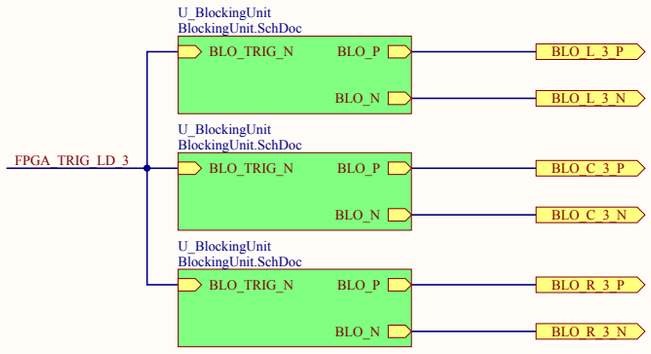

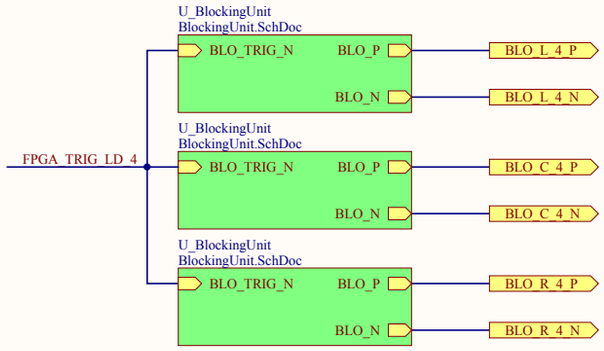

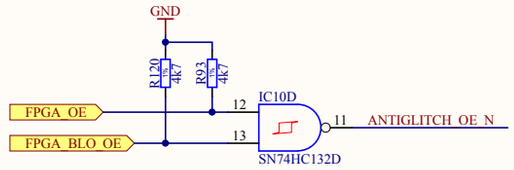

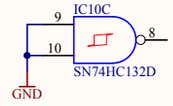

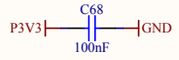

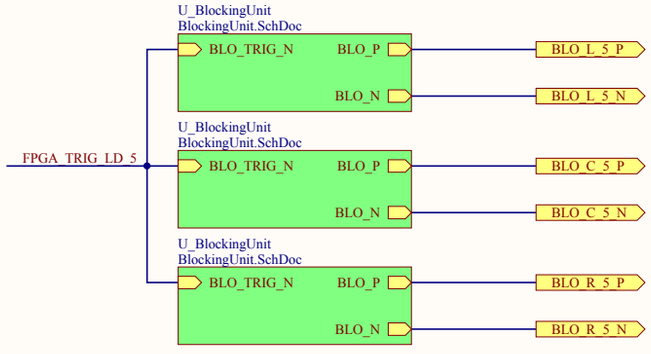

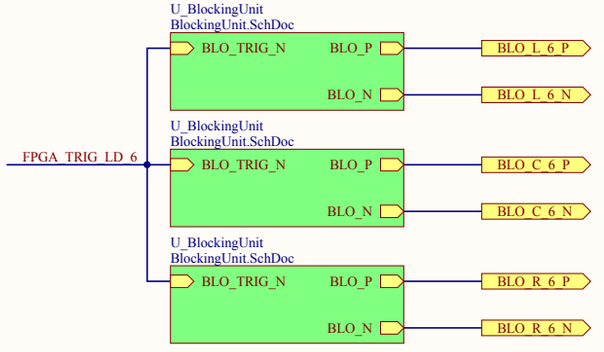

Project/Equipment	Standard Blocking Pulse Repeater		
Document	**Conv-TTL-Blo OUTPUT BLO**	Designer	Carlos Gil Soriano
		Drawn by	Carlos Gil Soriano 10/10/2011
		Check.by	B. Civel 08/12/2011
		Last Mod.	- 22/02/2012
		File	BlockingOutput.SchDoc
		Print Date	22/02/2012 13:27:06 Sheet 11 of 36
BE-CO CERN	*European Organization for Nuclear Research CH-1211 Genève 23 - Switzerland*	EDA-02446-V1-0	Size A3 Rev -

Copyright CERN 2011.
This documentation describes Open Hardware and is licensed under the CERN OHL v. 1.1.

You may redistribute and modify this documentation under the terms of the CERN OHL v.1.1. (http://ohwr.org/cernohl).
This documentation is distributed WITHOUT ANY EXPRESS OR IMPLIED WARRANTY, INCLUDING OF MERCHANTABILITY, SATISFACTORY QUALIT Y AND FITNESS FOR A PARTICULAR PURPOSE.
Please see the CERN OHL v.1.1 for applicable conditions

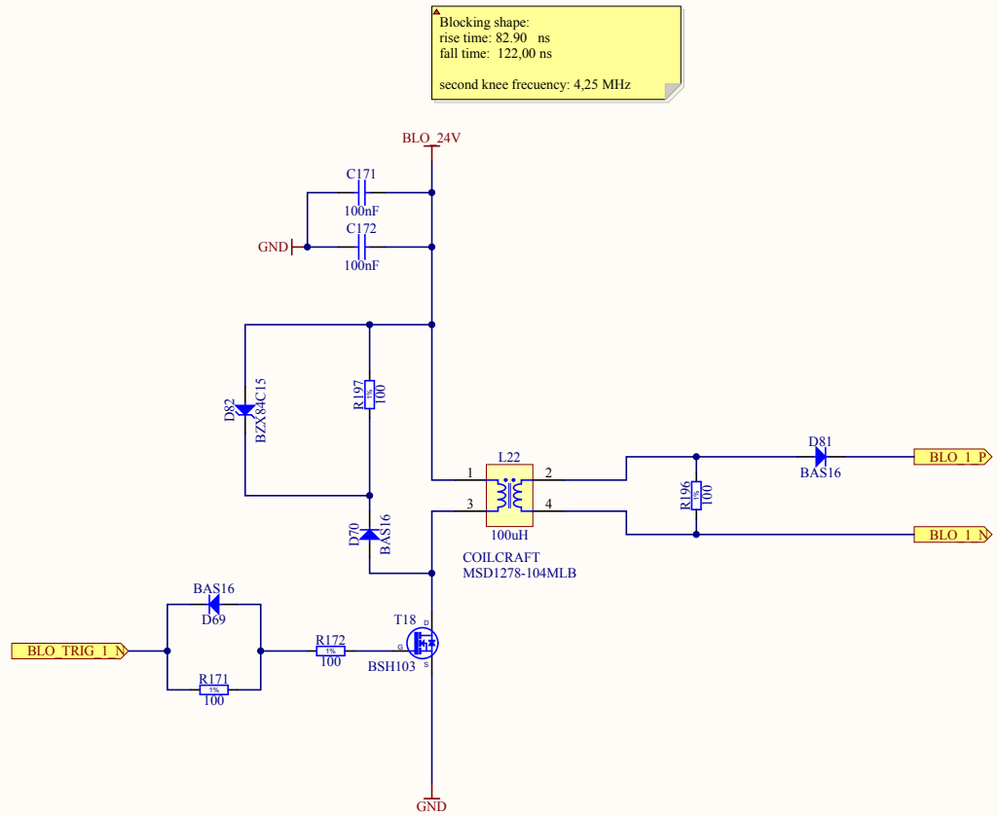

Project/Equipment	Standard Blocking Pulse Repeater		
Document	**Conv-TTL-Blo OUTPUT UNIT**	Designer Carlos Gil Soriano	
BE-CO		Drawn by Carlos Gil Soriano	10/10/2011
		Check.by B. Civel	08/12/2011
		Last Mod. -	22/02/2012
		File BlockingUnit.SchDoc	
		Print Date 22/02/2012 13:27:06	Sheet 12 of 36
European Organization for Nuclear Research CH-1211 Genève 23 - Switzerland	EDA-02446-V1-0	Size A3	Rev -

Copyright CERN 2011.
This documentation describes Open Hardware and is licensed under the CERN OHL v. 1.1.

You may redistribute and modify this documentation under the terms of the CERN OHL v.1.1. (http://ohwr.org/cernohl).
This documentation is distributed WITHOUT ANY EXPRESS OR IMPLIED WARRANTY, INCLUDING OF MERCHANTABILITY, SATISFACTORY QUALIT Y AND FITNESS FOR A PARTICULAR PURPOSE.
Please see the CERN OHL v.1.1 for applicable conditions

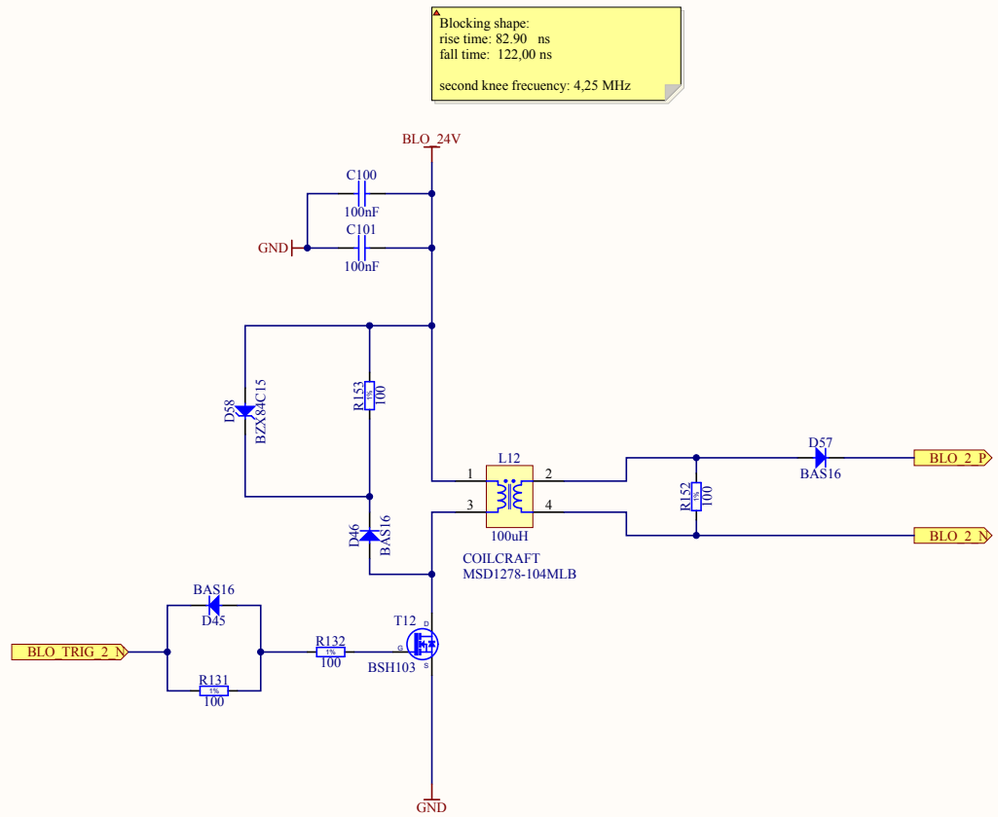

Project/Equipment	Standard Blocking Pulse Repeater		
Document	**Conv-TTL-Blo OUTPUT UNIT**	Designer Carlos Gil Soriano	
BE-CO		Drawn by Carlos Gil Soriano	10/10/2011
		Check.by B. Civel	08/12/2011
		Last Mod. -	22/02/2012
		File BlockingUnit.SchDoc	
		Print Date 22/02/2012 13:27:07	Sheet 12 of 36
European Organization for Nuclear Research CH-1211 Genève 23 - Switzerland	EDA-02446-V1-0	Size A3	Rev -

Copyright CERN 2011.
This documentation describes Open Hardware and is licensed under the CERN OHL v. 1.1.

You may redistribute and modify this documentation under the terms of the CERN OHL v.1.1. (http://ohwr.org/cernohl).
This documentation is distributed WITHOUT ANY EXPRESS OR IMPLIED WARRANTY, INCLUDING OF MERCHANTABILITY, SATISFACTORY QUALIT Y AND FITNESS FOR A PARTICULAR PURPOSE.
Please see the CERN OHL v.1.1 for applicable conditions

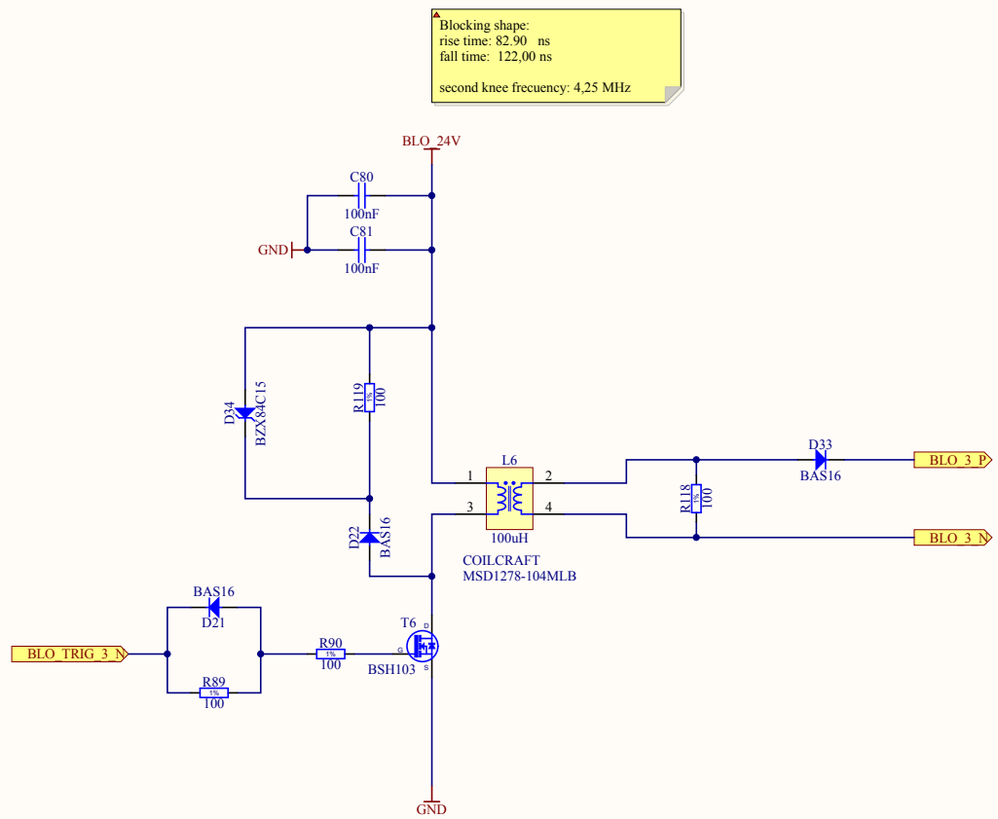

Project/Equipment	Standard Blocking Pulse Repeater
Document	Conv-TTL-Blo OUTPUT UNIT
Designer	Carlos Gil Soriano
Drawn by	Carlos Gil Soriano 10/10/2011
Check.by	B. Civel 08/12/2011
Last Mod.	- 22/02/2012
File	BlockingUnit.SchDoc
Print Date	22/02/2012 13:27:08
Sheet	12.3of 36
Size	A3
Rev	-

BE-CO

European Organization for Nuclear Research
CH-1211 Genève 23 - Switzerland

EDA-02446-V1-0

Copyright CERN 2011.
This documentation describes Open Hardware and is licensed under the CERN OHL v. 1.1.

You may redistribute and modify this documentation under the terms of the CERN OHL v.1.1. (http://ohwr.org/cernohl).
This documentation is distributed WITHOUT ANY EXPRESS OR IMPLIED WARRANTY, INCLUDING OF MERCHANTABILITY, SATISFACTORY QUALIT Y AND FITNESS FOR A PARTICULAR PURPOSE.
Please see the CERN OHL v.1.1 for applicable conditions

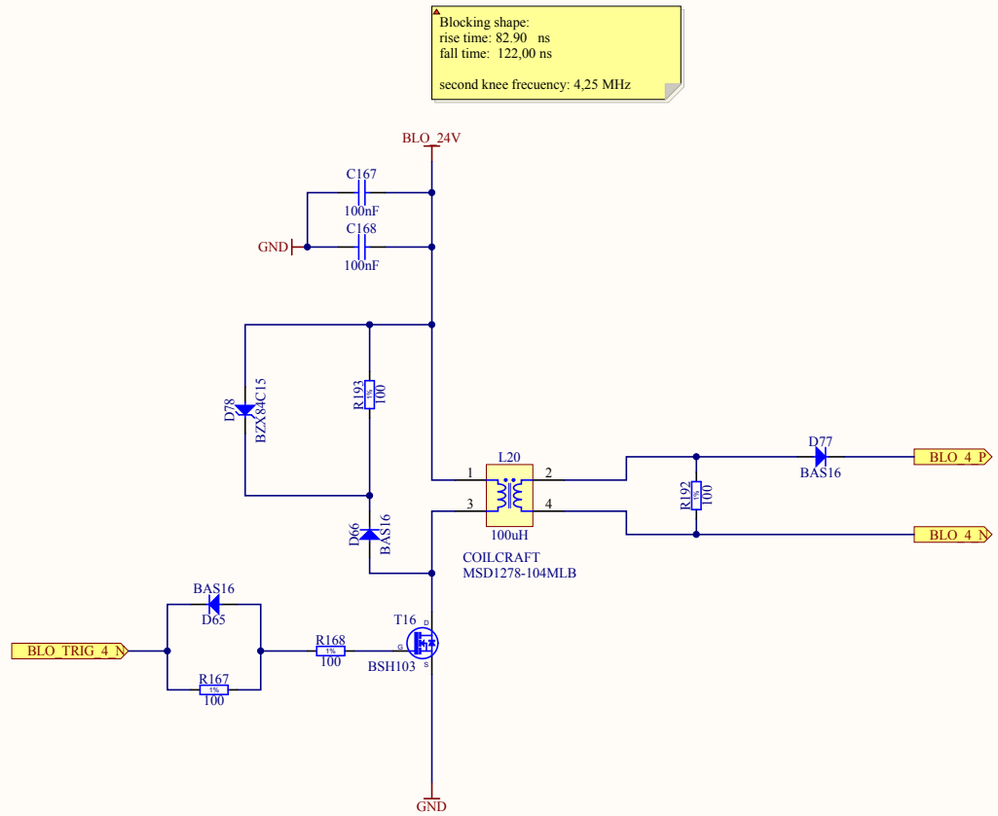

Project/Equipment	Standard Blocking Pulse Repeater		
Document	**Conv-TTL-Blo OUTPUT UNIT**	Designer Carlos Gil Soriano	
BE-CO		Drawn by Carlos Gil Soriano	10/10/2011
		Check.by B. Civel	08/12/2011
		Last Mod. -	22/02/2012
		File BlockingUnit.SchDoc	
		Print Date 22/02/2012 13:27:09	Sheet 12.4of 36
European Organization for Nuclear Research CH-1211 Genève 23 - Switzerland	EDA-02446-V1-0	Size A3	Rev -

Copyright CERN 2011.
This documentation describes Open Hardware and is licensed under the CERN OHL v. 1.1.

You may redistribute and modify this documentation under the terms of the CERN OHL v.1.1. (http://ohwr.org/cernohl).
This documentation is distributed WITHOUT ANY EXPRESS OR IMPLIED WARRANTY, INCLUDING OF MERCHANTABILITY, SATISFACTORY QUALIT Y AND FITNESS FOR A PARTICULAR PURPOSE.
Please see the CERN OHL v.1.1 for applicable conditions

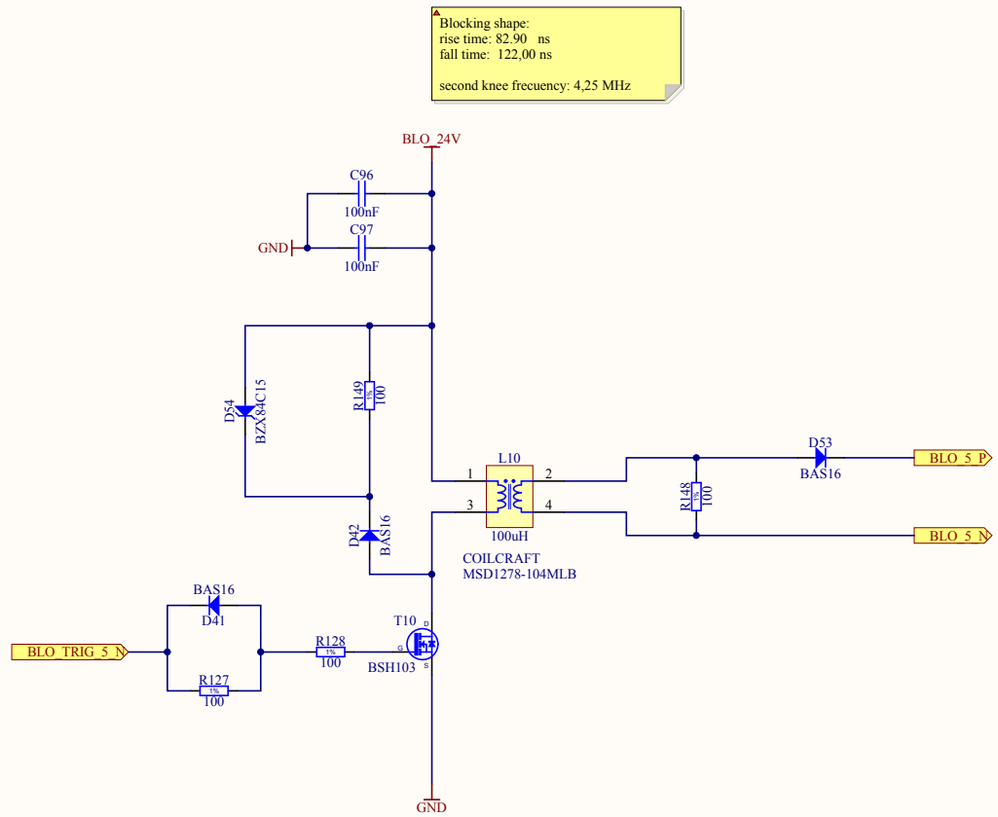

Project/Equipment	Standard Blocking Pulse Repeater		
Document	**Conv-TTL-Blo OUTPUT UNIT**	Designer Carlos Gil Soriano	
BE-CO		Drawn by Carlos Gil Soriano	10/10/2011
		Check.by B. Civel	08/12/2011
		Last Mod. -	22/02/2012
		File BlockingUnit.SchDoc	
		Print Date 22/02/2012 13:27:09	Sheet 12.5of 36
European Organization for Nuclear Research CH-1211 Genève 23 - Switzerland	EDA-02446-V1-0	Size A3	Rev -

Copyright CERN 2011.
This documentation describes Open Hardware and is licensed under the CERN OHL v. 1.1.

You may redistribute and modify this documentation under the terms of the CERN OHL v.1.1. (http://ohwr.org/cernohl).
This documentation is distributed WITHOUT ANY EXPRESS OR IMPLIED WARRANTY, INCLUDING OF MERCHANTABILITY, SATISFACTORY QUALIT Y AND FITNESS FOR A PARTICULAR PURPOSE.
Please see the CERN OHL v.1.1 for applicable conditions

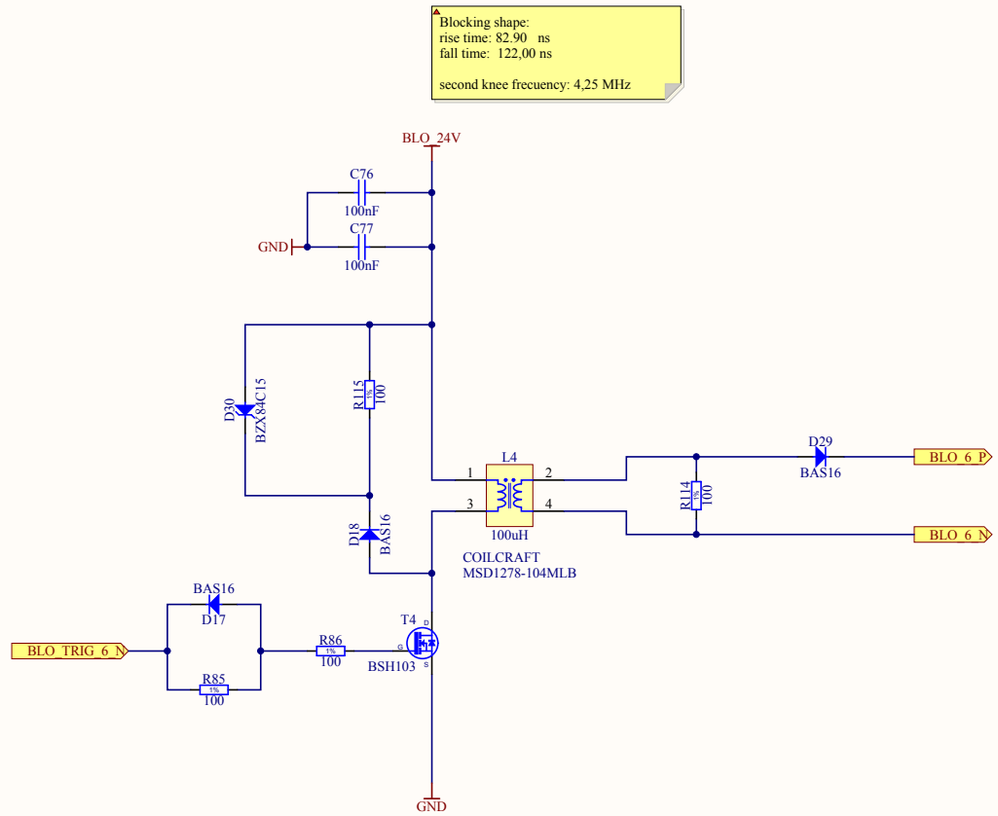

Project/Equipment	Standard Blocking Pulse Repeater		
Document	**Conv-TTL-Blo OUTPUT UNIT**	Designer Carlos Gil Soriano	
BE-CO		Drawn by Carlos Gil Soriano	10/10/2011
		Check.by B. Civel	08/12/2011
		Last Mod. -	22/02/2012
		File BlockingUnit.SchDoc	
		Print Date 22/02/2012 13:27:10	Sheet 12.6of 36
European Organization for Nuclear Research CH-1211 Genève 23 - Switzerland	EDA-02446-V1-0	Size A3	Rev -

Copyright CERN 2011.
This documentation describes Open Hardware and is licensed under the CERN OHL v. 1.1.

You may redistribute and modify this documentation under the terms of the CERN OHL v.1.1. (http://ohwr.org/cernohl).
This documentation is distributed WITHOUT ANY EXPRESS OR IMPLIED WARRANTY, INCLUDING OF MERCHANTABILITY, SATISFACTORY QUALIT Y AND FITNESS FOR A PARTICULAR PURPOSE.
Please see the CERN OHL v.1.1 for applicable conditions

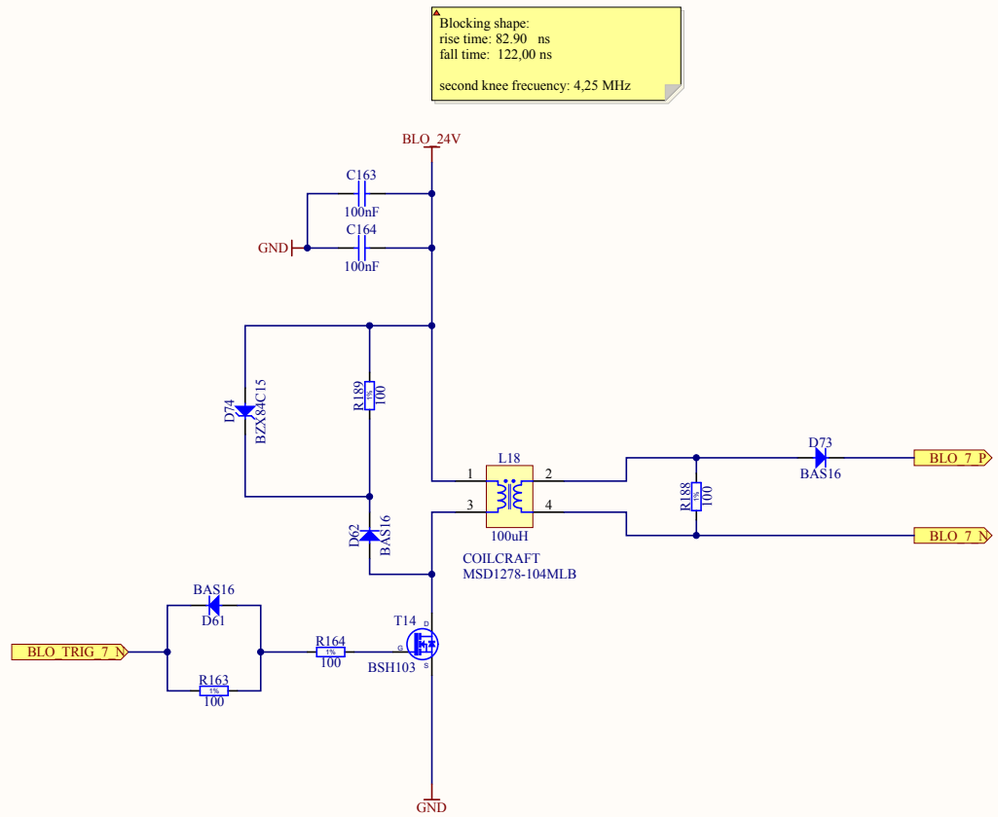

Project/Equipment	Standard Blocking Pulse Repeater		
Document	**Conv-TTL-Blo OUTPUT UNIT**	Designer Carlos Gil Soriano	
BE-CO		Drawn by Carlos Gil Soriano	10/10/2011
		Check.by B. Civel	08/12/2011
		Last Mod. -	22/02/2012
		File BlockingUnit.SchDoc	
		Print Date 22/02/2012 13:27:11	Sheet 12 of 36
European Organization for Nuclear Research CH-1211 Genève 23 - Switzerland	EDA-02446-V1-0	Size A3	Rev -

Copyright CERN 2011.
This documentation describes Open Hardware and is licensed under the CERN OHL v. 1.1.

You may redistribute and modify this documentation under the terms of the CERN OHL v.1.1. (http://ohwr.org/cernohl).
This documentation is distributed WITHOUT ANY EXPRESS OR IMPLIED WARRANTY, INCLUDING OF MERCHANTABILITY, SATISFACTORY QUALIT Y AND FITNESS FOR A PARTICULAR PURPOSE.
Please see the CERN OHL v.1.1 for applicable conditions

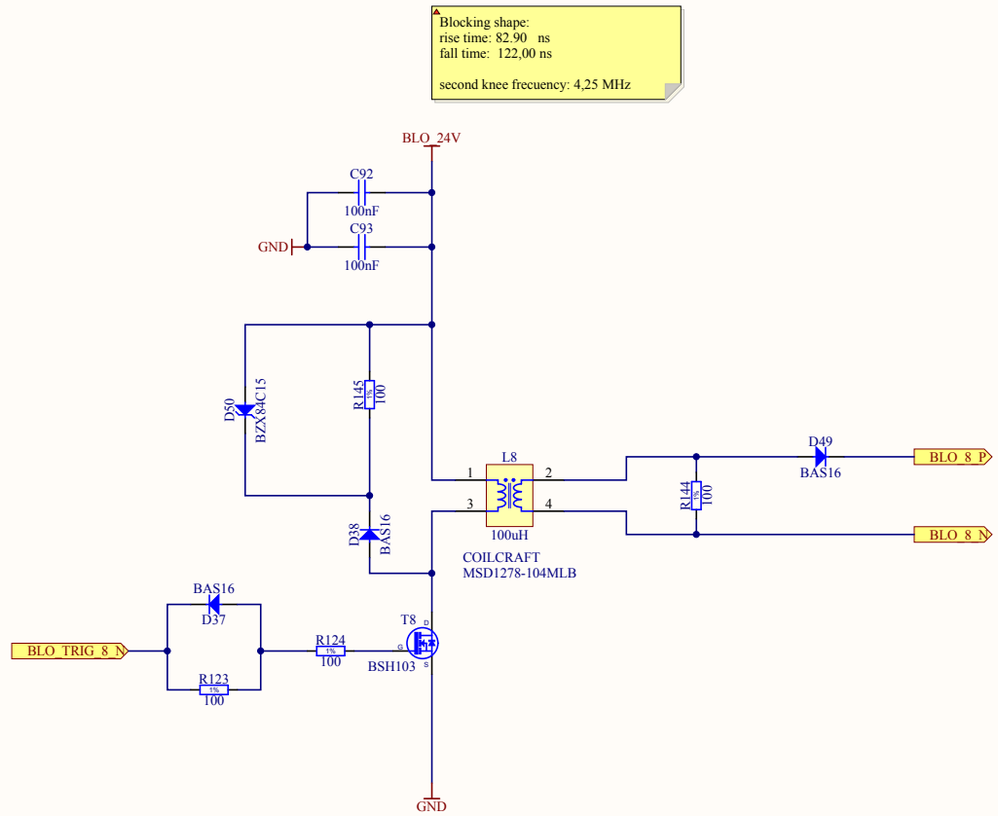

Project/Equipment	Standard Blocking Pulse Repeater		
Document	**Conv-TTL-Blo OUTPUT UNIT**	Designer Carlos Gil Soriano	
BE-CO		Drawn by Carlos Gil Soriano	10/10/2011
		Check.by B. Civel	08/12/2011
		Last Mod. -	22/02/2012
		File BlockingUnit.SchDoc	
		Print Date 22/02/2012 13:27:12	Sheet 12.8of 36
European Organization for Nuclear Research CH-1211 Genève 23 - Switzerland	EDA-02446-V1-0	Size A3	Rev -

Copyright CERN 2011.
This documentation describes Open Hardware and is licensed under the CERN OHL v. 1.1.

You may redistribute and modify this documentation under the terms of the CERN OHL v.1.1. (http://ohwr.org/cernohl).
This documentation is distributed WITHOUT ANY EXPRESS OR IMPLIED WARRANTY, INCLUDING OF MERCHANTABILITY, SATISFACTORY QUALIT Y AND FITNESS FOR A PARTICULAR PURPOSE.
Please see the CERN OHL v.1.1 for applicable conditions

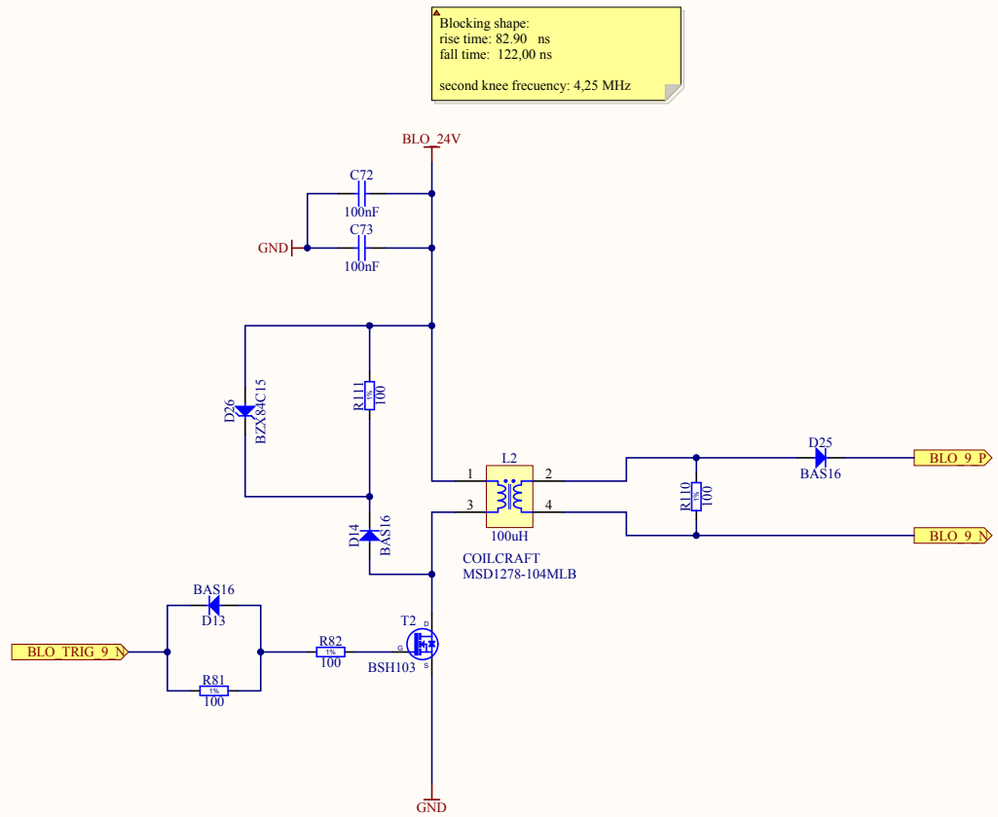

Project/Equipment	Standard Blocking Pulse Repeater
Document	**Conv-TTL-Blo OUTPUT UNIT**
Designer	Carlos Gil Soriano
Drawn by	Carlos Gil Soriano 10/10/2011
Check.by	B. Civel 08/12/2011
Last Mod.	- 22/02/2012
File	BlockingUnit.SchDoc
Print Date	22/02/2012 13:27:13
Sheet	12.9bf 36
Size	A3
Rev	-

BE-CO

European Organization for Nuclear Research
CH-1211 Genève 23 - Switzerland

EDA-02446-V1-0

Copyright CERN 2011.
This documentation describes Open Hardware and is licensed under the CERN OHL v. 1.1.

You may redistribute and modify this documentation under the terms of the CERN OHL v.1.1. (http://ohwr.org/cernohl).
This documentation is distributed WITHOUT ANY EXPRESS OR IMPLIED WARRANTY, INCLUDING OF MERCHANTABILITY, SATISFACTORY QUALIT Y AND FITNESS FOR A PARTICULAR PURPOSE.
Please see the CERN OHL v.1.1 for applicable conditions

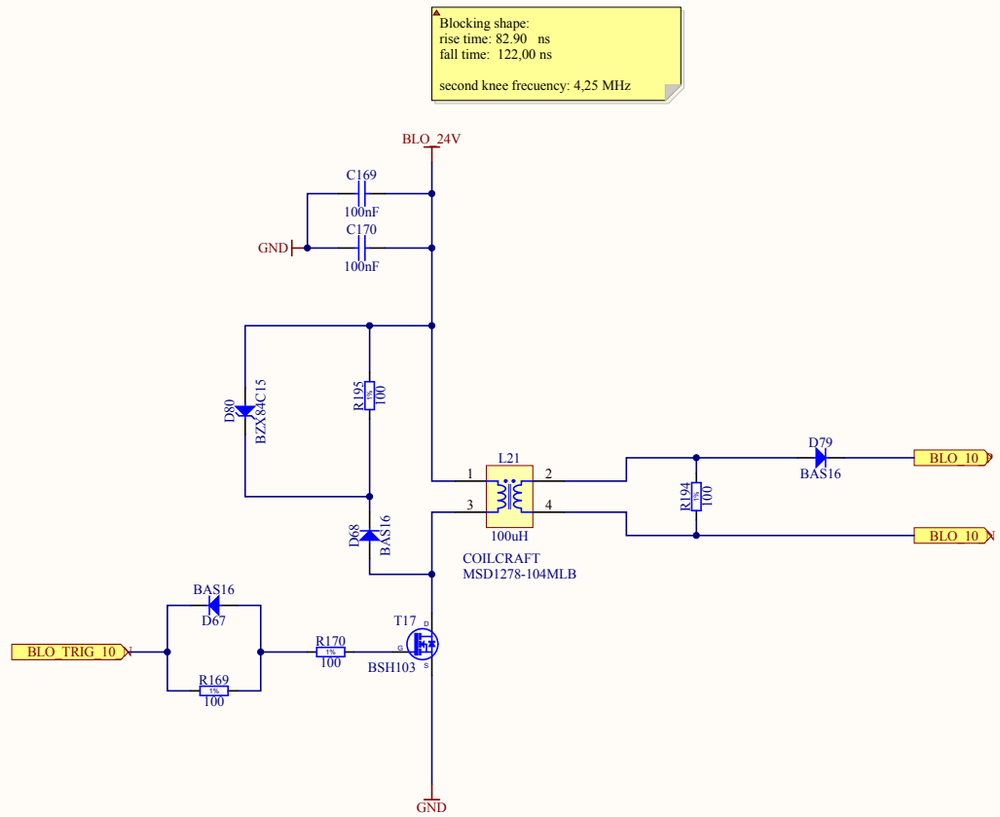

Project/Equipment	Standard Blocking Pulse Repeater		
Document	**Conv-TTL-Blo OUTPUT UNIT**	Designer Carlos Gil Soriano	
BE-CO		Drawn by Carlos Gil Soriano	10/10/2011
		Check.by B. Civel	08/12/2011
		Last Mod. -	22/02/2012
		File BlockingUnit.SchDoc	
		Print Date 22/02/2012 13:27:14	Sheet 12 of 36
European Organization for Nuclear Research CH-1211 Genève 23 - Switzerland	EDA-02446-V1-0	Size A3	Rev -

Copyright CERN 2011.
This documentation describes Open Hardware and is licensed under the CERN OHL v. 1.1.

You may redistribute and modify this documentation under the terms of the CERN OHL v.1.1. (http://ohwr.org/cernohl).
This documentation is distributed WITHOUT ANY EXPRESS OR IMPLIED WARRANTY, INCLUDING OF MERCHANTABILITY, SATISFACTORY QUALIT Y AND FITNESS FOR A PARTICULAR PURPOSE.
Please see the CERN OHL v.1.1 for applicable conditions

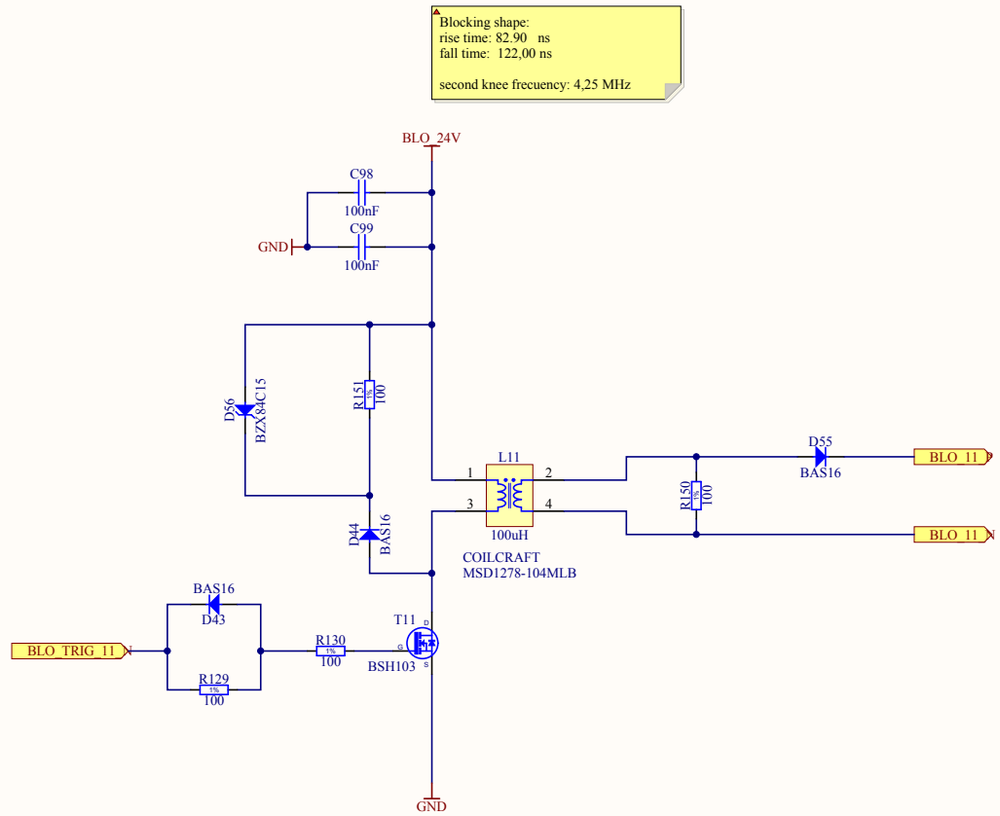

Project/Equipment	Standard Blocking Pulse Repeater		
Document	**Conv-TTL-Blo OUTPUT UNIT**	Designer Carlos Gil Soriano	
BE-CO		Drawn by Carlos Gil Soriano	10/10/2011
		Check.by B. Civel	08/12/2011
		Last Mod. -	22/02/2012
		File BlockingUnit.SchDoc	
		Print Date 22/02/2012 13:27:14	Sheet 12.1 of 36
European Organization for Nuclear Research CH-1211 Genève 23 - Switzerland	EDA-02446-V1-0	Size A3	Rev -

Copyright CERN 2011.
This documentation describes Open Hardware and is licensed under the CERN OHL v. 1.1.

You may redistribute and modify this documentation under the terms of the CERN OHL v.1.1. (http://ohwr.org/cernohl).
This documentation is distributed WITHOUT ANY EXPRESS OR IMPLIED WARRANTY, INCLUDING OF MERCHANTABILITY, SATISFACTORY QUALIT Y AND FITNESS FOR A PARTICULAR PURPOSE.
Please see the CERN OHL v.1.1 for applicable conditions

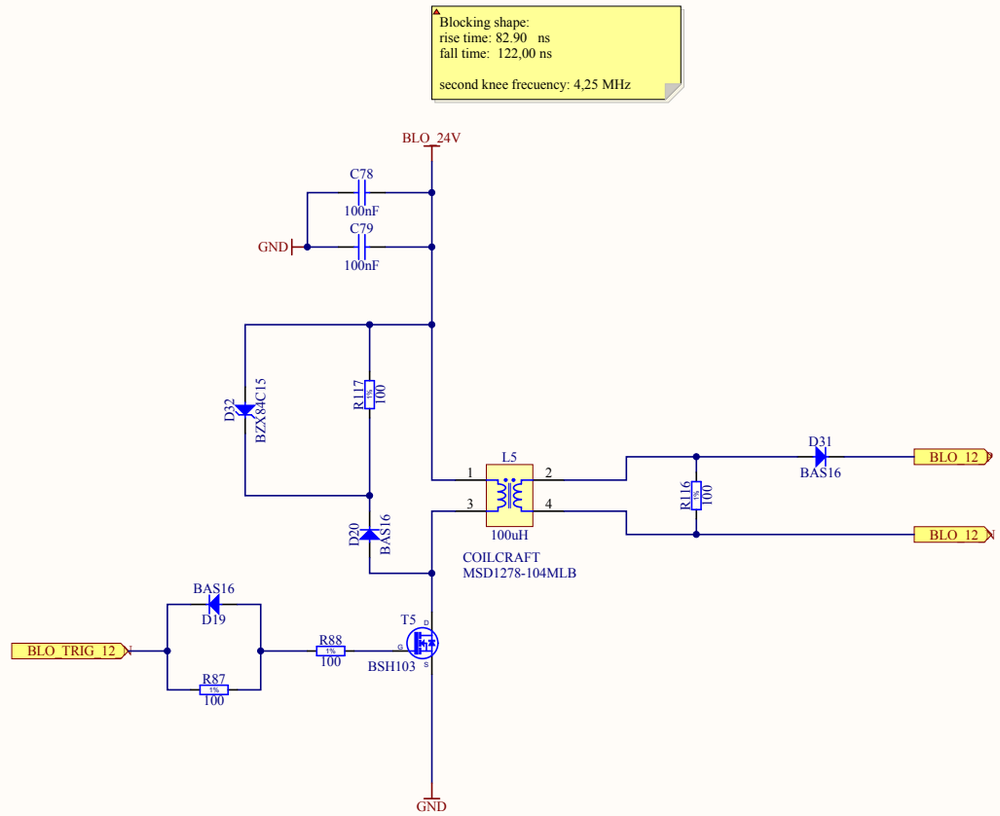

Project/Equipment	Standard Blocking Pulse Repeater		
Document	**Conv-TTL-Blo OUTPUT UNIT**	Designer Carlos Gil Soriano	
BE-CO		Drawn by Carlos Gil Soriano	10/10/2011
		Check.by B. Civel	08/12/2011
		Last Mod. -	22/02/2012
		File BlockingUnit.SchDoc	
		Print Date 22/02/2012 13:27:15	Sheet 12 of 36
European Organization for Nuclear Research CH-1211 Genève 23 - Switzerland	EDA-02446-V1-0	Size A3	Rev -

Copyright CERN 2011.
This documentation describes Open Hardware and is licensed under the CERN OHL v. 1.1.

You may redistribute and modify this documentation under the terms of the CERN OHL v.1.1. (http://ohwr.org/cernohl).
This documentation is distributed WITHOUT ANY EXPRESS OR IMPLIED WARRANTY, INCLUDING OF MERCHANTABILITY, SATISFACTORY QUALIT Y AND FITNESS FOR A PARTICULAR PURPOSE.
Please see the CERN OHL v.1.1 for applicable conditions

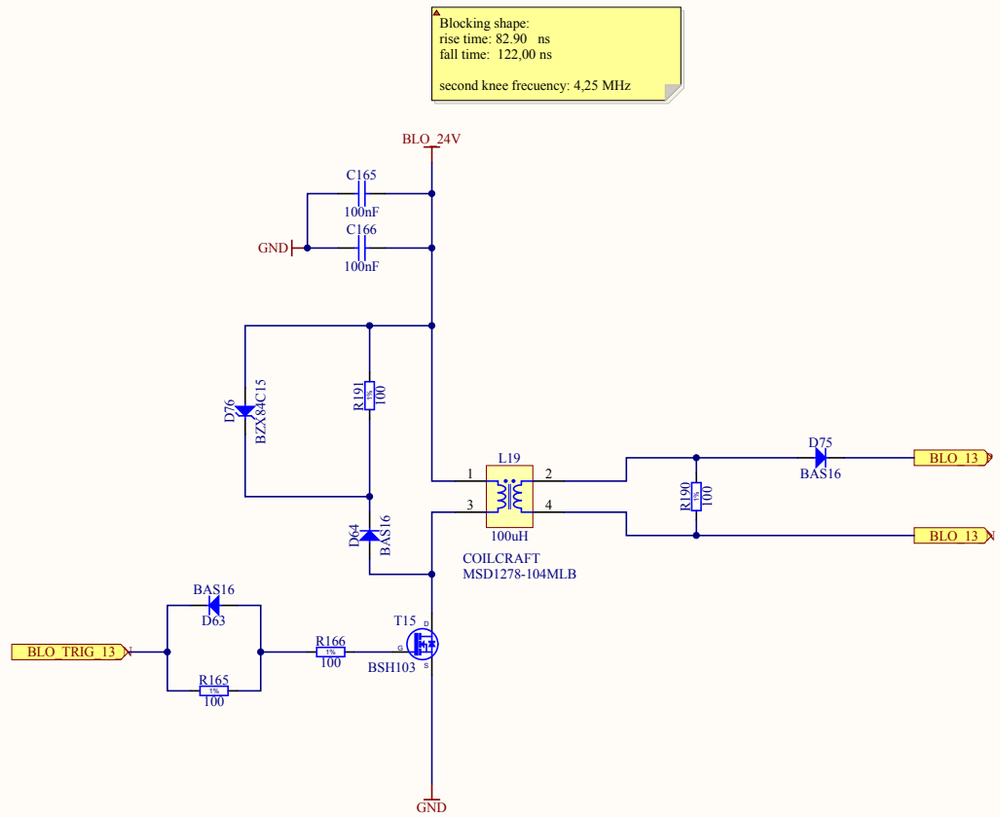

Project/Equipment	Standard Blocking Pulse Repeater
Document	Conv-TTL-Blo OUTPUT UNIT
Designer	Carlos Gil Soriano
Drawn by	Carlos Gil Soriano 10/10/2011
Check.by	B. Civel 08/12/2011
Last Mod.	- 22/02/2012
File	BlockingUnit.SchDoc
Print Date	22/02/2012 13:27:16
Sheet	12 of 36
Size	A3
Rev	-

BE-CO

European Organization for Nuclear Research
CH-1211 Genève 23 - Switzerland

EDA-02446-V1-0

Copyright CERN 2011.
This documentation describes Open Hardware and is licensed under the CERN OHL v. 1.1.

You may redistribute and modify this documentation under the terms of the CERN OHL v.1.1. (http://ohwr.org/cernohl).
This documentation is distributed WITHOUT ANY EXPRESS OR IMPLIED WARRANTY, INCLUDING OF MERCHANTABILITY, SATISFACTORY QUALIT Y AND FITNESS FOR A PARTICULAR PURPOSE.
Please see the CERN OHL v.1.1 for applicable conditions

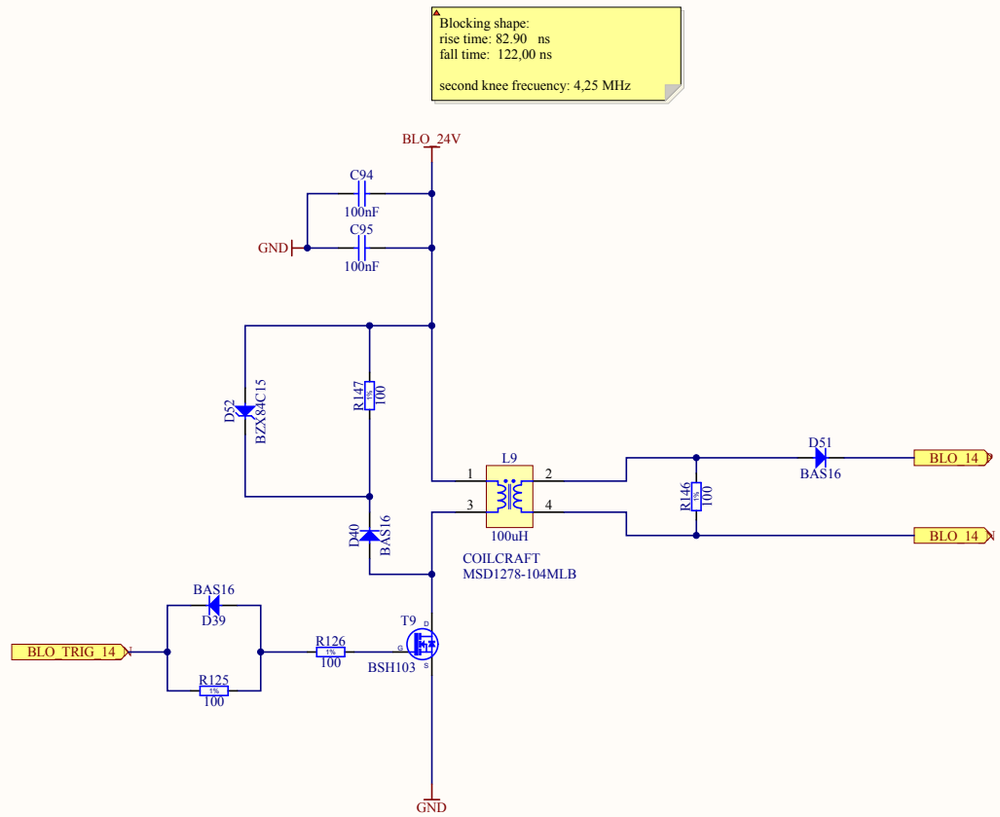

Project/Equipment	Standard Blocking Pulse Repeater		
Document	**Conv-TTL-Blo OUTPUT UNIT**	Designer Carlos Gil Soriano	
BE-CO		Drawn by Carlos Gil Soriano	10/10/2011
		Check.by B. Civel	08/12/2011
		Last Mod. -	22/02/2012
		File BlockingUnit.SchDoc	
		Print Date 22/02/2012 13:27:17	Sheet 12 of 36
European Organization for Nuclear Research CH-1211 Genève 23 - Switzerland	EDA-02446-V1-0	Size A3	Rev -

Copyright CERN 2011.
This documentation describes Open Hardware and is licensed under the CERN OHL v. 1.1.

You may redistribute and modify this documentation under the terms of the CERN OHL v.1.1. (http://ohwr.org/cernohl).
This documentation is distributed WITHOUT ANY EXPRESS OR IMPLIED WARRANTY, INCLUDING OF MERCHANTABILITY, SATISFACTORY QUALIT Y AND FITNESS FOR A PARTICULAR PURPOSE.
Please see the CERN OHL v.1.1 for applicable conditions

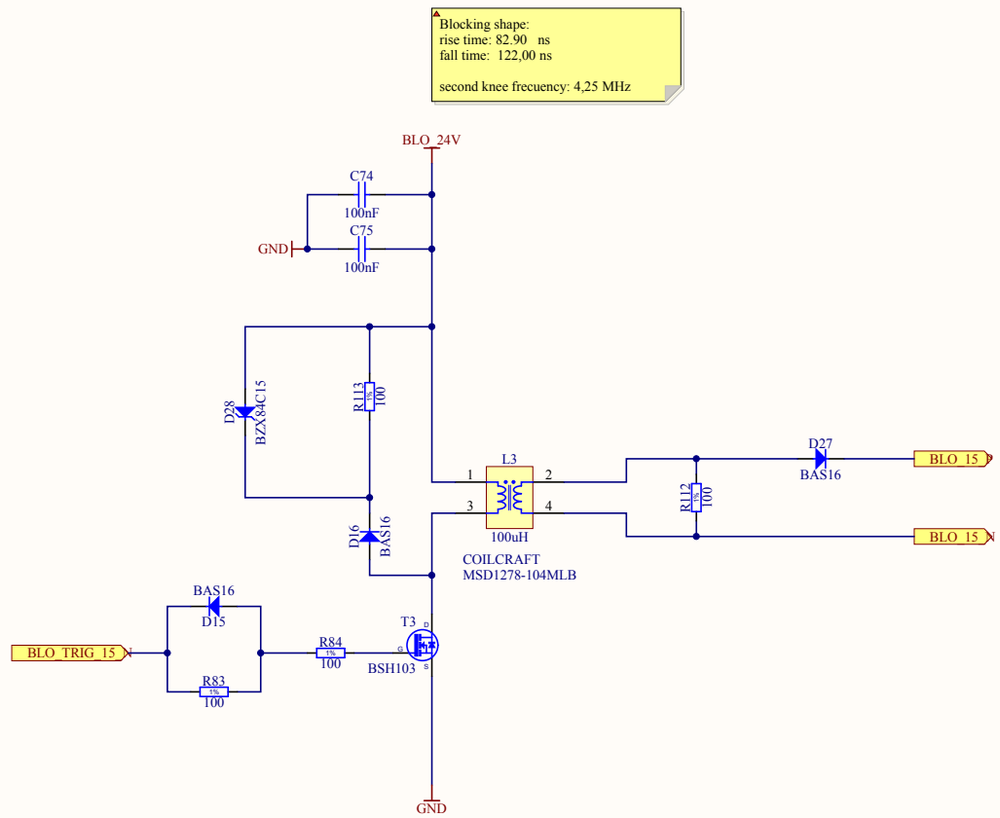

Project/Equipment	Standard Blocking Pulse Repeater		
Document	**Conv-TTL-Blo OUTPUT UNIT**	Designer Carlos Gil Soriano	
BE-CO		Drawn by Carlos Gil Soriano	10/10/2011
		Check.by B. Civel	08/12/2011
		Last Mod. -	22/02/2012
		File BlockingUnit.SchDoc	
		Print Date 22/02/2012 13:27:18	Sheet 12 of 36
European Organization for Nuclear Research CH-1211 Genève 23 - Switzerland	EDA-02446-V1-0	Size A3	Rev -

Copyright CERN 2011.
This documentation describes Open Hardware and is licensed under the CERN OHL v. 1.1.

You may redistribute and modify this documentation under the terms of the CERN OHL v.1.1. (http://ohwr.org/cernohl).
This documentation is distributed WITHOUT ANY EXPRESS OR IMPLIED WARRANTY, INCLUDING OF MERCHANTABILITY, SATISFACTORY QUALIT Y AND FITNESS FOR A PARTICULAR PURPOSE.
Please see the CERN OHL v.1.1 for applicable conditions

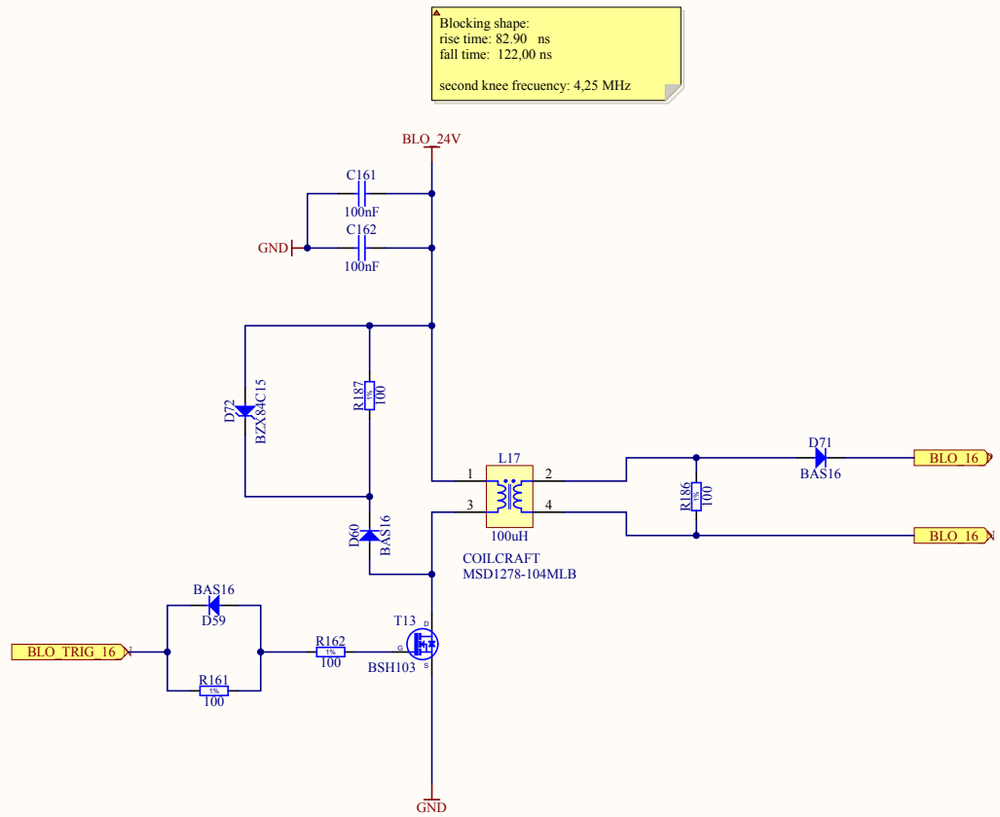

Project/Equipment	Standard Blocking Pulse Repeater		
Document	**Conv-TTL-Blo OUTPUT UNIT**	Designer Carlos Gil Soriano	
BE-CO		Drawn by Carlos Gil Soriano	10/10/2011
		Check.by B. Civel	08/12/2011
		Last Mod. -	22/02/2012
		File BlockingUnit.SchDoc	
		Print Date 22/02/2012 13:27:19	Sheet 12 of 36
European Organization for Nuclear Research CH-1211 Genève 23 - Switzerland	EDA-02446-V1-0	Size A3	Rev -

Copyright CERN 2011.
This documentation describes Open Hardware and is licensed under the CERN OHL v. 1.1.

You may redistribute and modify this documentation under the terms of the CERN OHL v.1.1. (http://ohwr.org/cernohl).
This documentation is distributed WITHOUT ANY EXPRESS OR IMPLIED WARRANTY, INCLUDING OF MERCHANTABILITY, SATISFACTORY QUALIT Y AND FITNESS FOR A PARTICULAR PURPOSE.
Please see the CERN OHL v.1.1 for applicable conditions

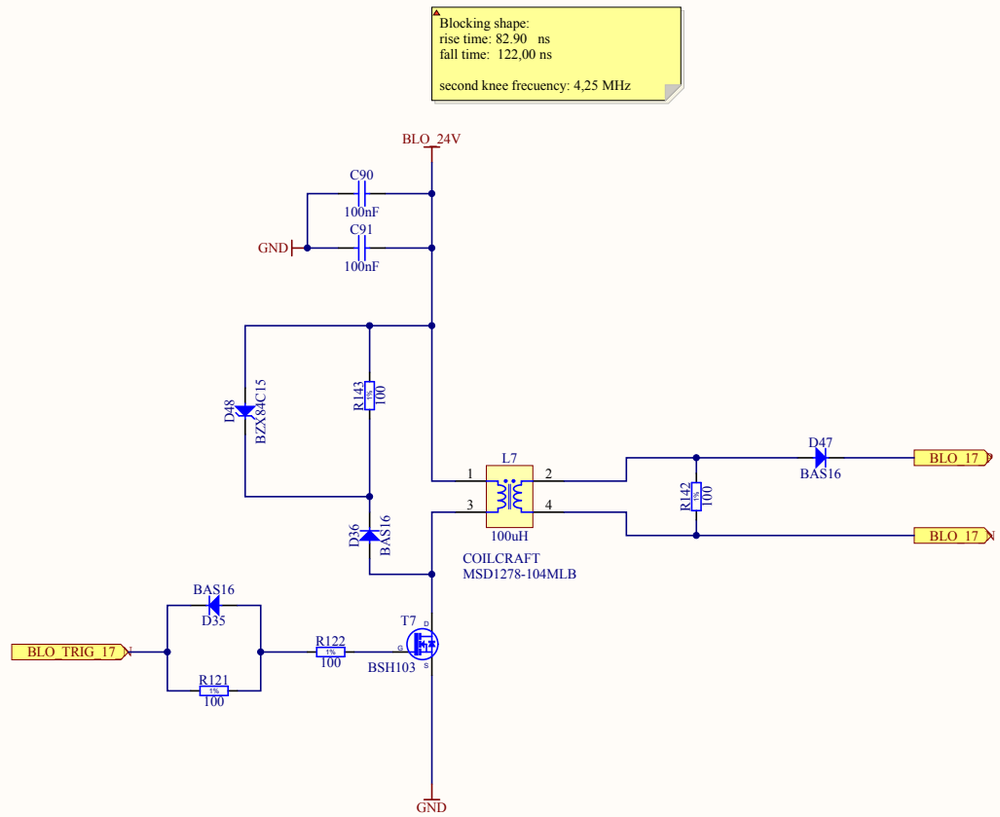

Project/Equipment	Standard Blocking Pulse Repeater
Document	Conv-TTL-Blo OUTPUT UNIT
Designer	Carlos Gil Soriano
Drawn by	Carlos Gil Soriano 10/10/2011
Check.by	B. Civel 08/12/2011
Last Mod.	- 22/02/2012
File	BlockingUnit.SchDoc
Print Date	22/02/2012 13:27:19
Sheet	12 of 36
Size	A3
Rev	-

BE-CO

European Organization for Nuclear Research
CH-1211 Genève 23 - Switzerland

EDA-02446-V1-0

Copyright CERN 2011.
This documentation describes Open Hardware and is licensed under the CERN OHL v. 1.1.

You may redistribute and modify this documentation under the terms of the CERN OHL v.1.1. (http://ohwr.org/cernohl).
This documentation is distributed WITHOUT ANY EXPRESS OR IMPLIED WARRANTY, INCLUDING OF MERCHANTABILITY, SATISFACTORY QUALIT Y AND FITNESS FOR A PARTICULAR PURPOSE.
Please see the CERN OHL v.1.1 for applicable conditions

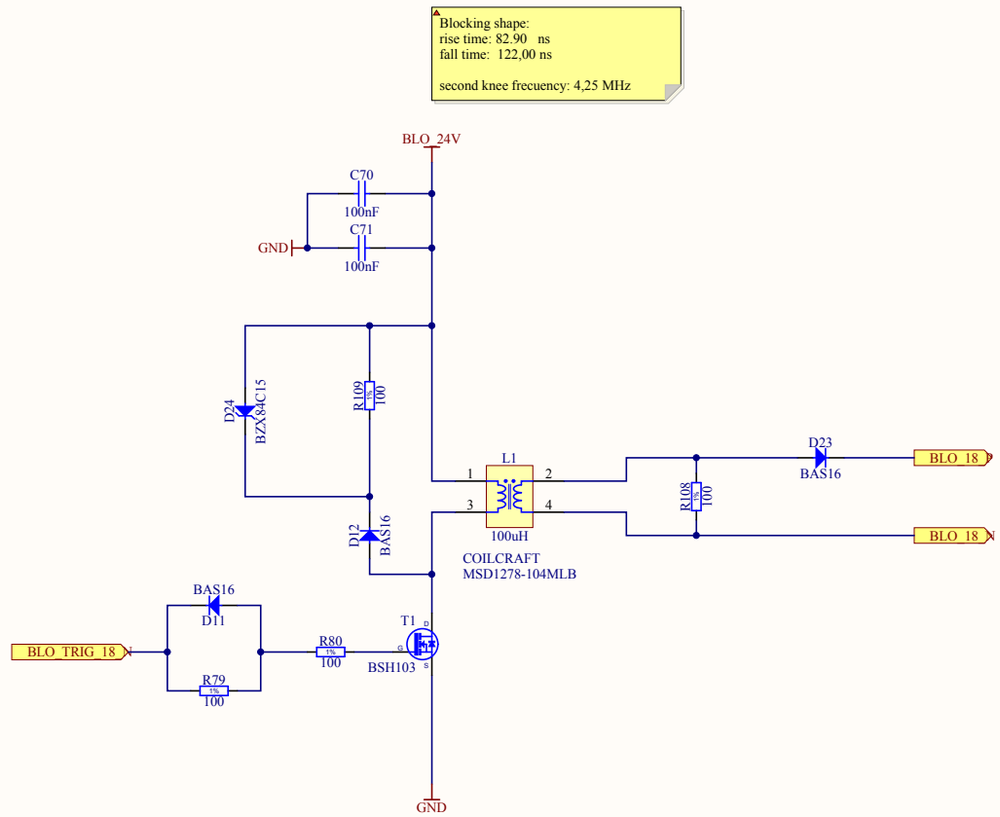

Project/Equipment	Standard Blocking Pulse Repeater		
Document	**Conv-TTL-Blo OUTPUT UNIT**	Designer Carlos Gil Soriano	
BE-CO		Drawn by Carlos Gil Soriano	10/10/2011
		Check.by B. Civel	08/12/2011
		Last Mod. -	22/02/2012
		File BlockingUnit.SchDoc	
		Print Date 22/02/2012 13:27:20	Sheet 12 of 36
European Organization for Nuclear Research CH-1211 Genève 23 - Switzerland	EDA-02446-V1-0	Size A3	Rev -

Copyright CERN 2011.
This documentation describes Open Hardware and is licensed under the CERN OHL v. 1.1.

You may redistribute and modify this documentation under the terms of the CERN OHL v.1.1. (http://ohwr.org/cernohl).
This documentation is distributed WITHOUT ANY EXPRESS OR IMPLIED WARRANTY, INCLUDING OF MERCHANTABILITY, SATISFACTORY QUALIT Y AND FITNESS FOR A PARTICULAR PURPOSE.
Please see the CERN OHL v.1.1 for applicable conditions

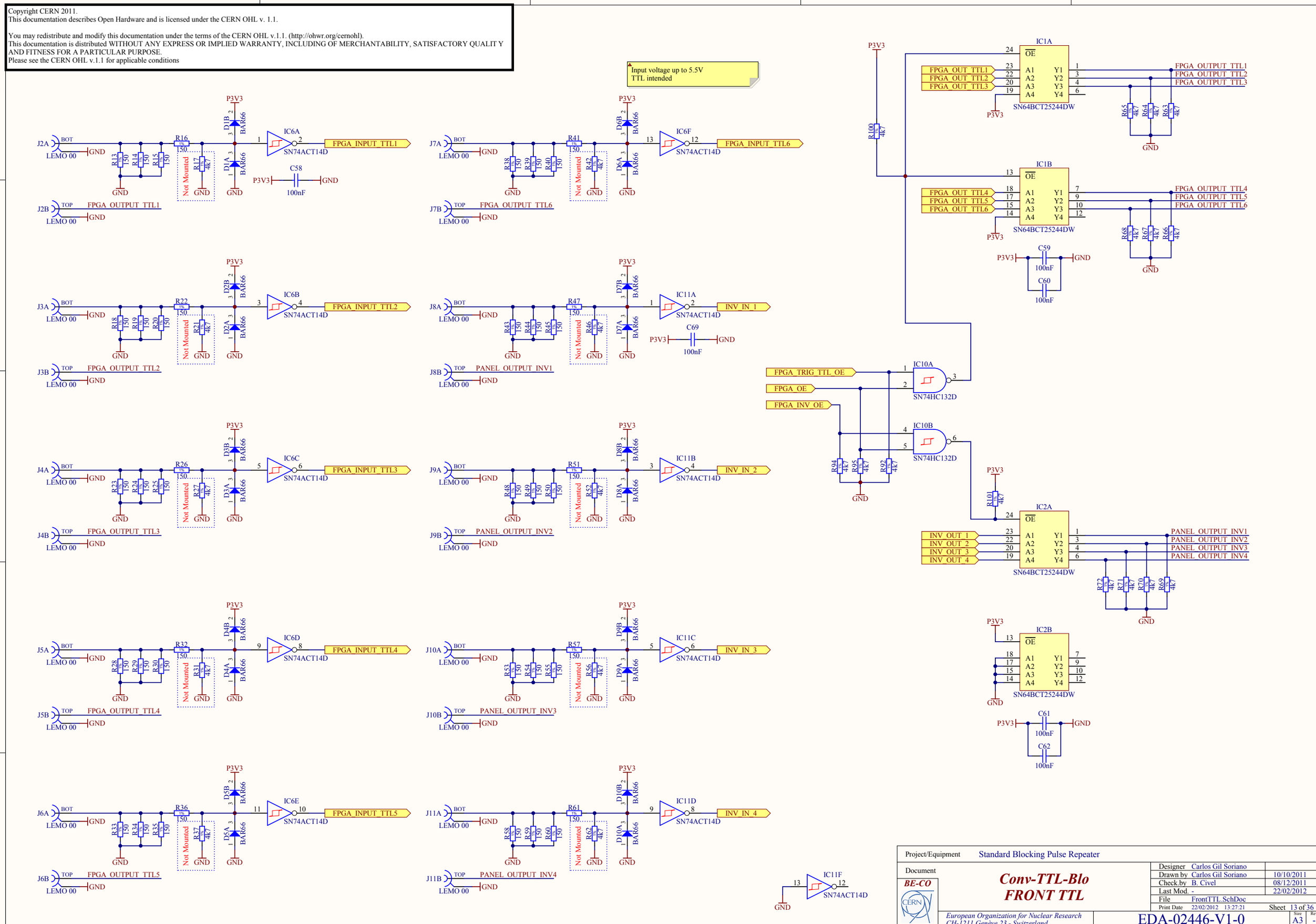

Project/Equipment	Standard Blocking Pulse Repeater		
Document	**Conv-TTL-Blo FRONT TTL**	Designer Carlos Gil Soriano	
BE-CO		Drawn by Carlos Gil Soriano	10/10/2011
		Check.by B. Civel	08/12/2011
		Last Mod. -	22/02/2012
		File FrontTTL.SchDoc	
		Print Date 22/02/2012 13:27:21	Sheet 13 of 36
	European Organization for Nuclear Research CH-1211 Genève 23 - Switzerland	EDA-02446-V1-0	Size A3 Rev -

Copyright CERN 2011.
This documentation describes Open Hardware and is licensed under the CERN OHL v. 1.1.

You may redistribute and modify this documentation under the terms of the CERN OHL v.1.1. (http://ohwr.org/cernohl).
This documentation is distributed WITHOUT ANY EXPRESS OR IMPLIED WARRANTY, INCLUDING OF MERCHANTABILITY, SATISFACTORY QUALIT Y AND FITNESS FOR A PARTICULAR PURPOSE.
Please see the CERN OHL v.1.1 for applicable conditions

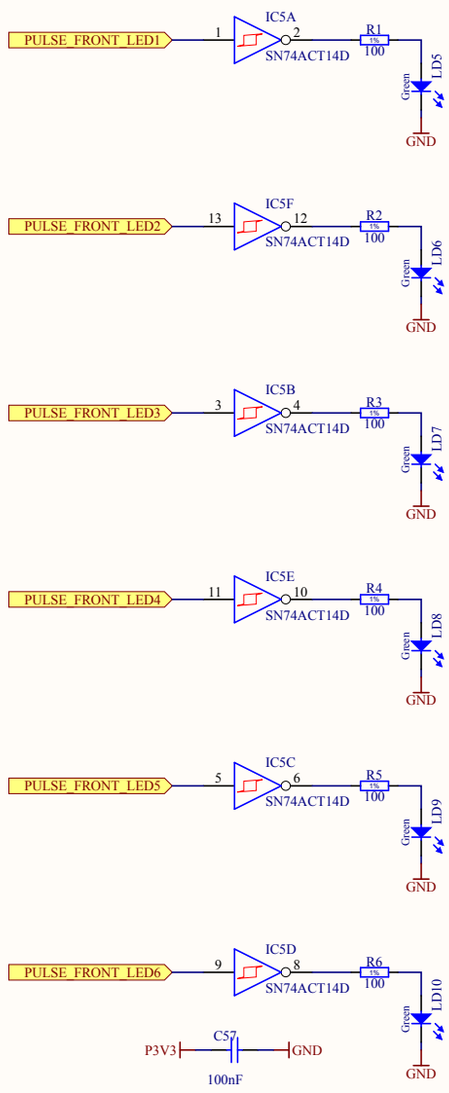

Dialight model

Green	551-1307F	2.5V@ 4.7mA
Red	551-1107F	1.9V@ 6mA

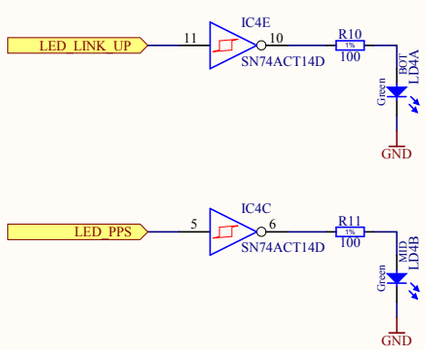

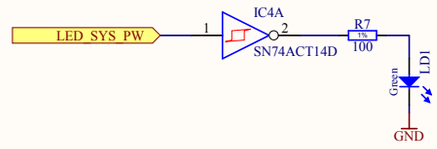

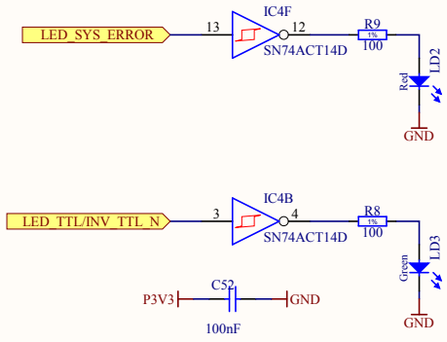

ESD discharge strips (top and bottom of the card)

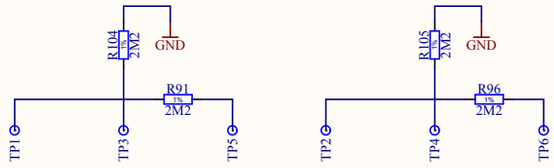

Project/Equipment	Standard Blocking Pulse Repeater		
Document	**Conv-TTL-Blo FRONT PANEL**	Designer Carlos Gil Soriano	
		Drawn by Carlos Gil Soriano	10/10/2011
		Check.by B. Civel	08/12/2011
		Last Mod. -	22/02/2012
		File FrontPanelLeds.SchDoc	
		Print Date 22/02/2012 13:27:22	Sheet 14 of 36
European Organization for Nuclear Research CH-1211 Genève 23 - Switzerland	EDA-02446-V1-0	Size A3	Rev -