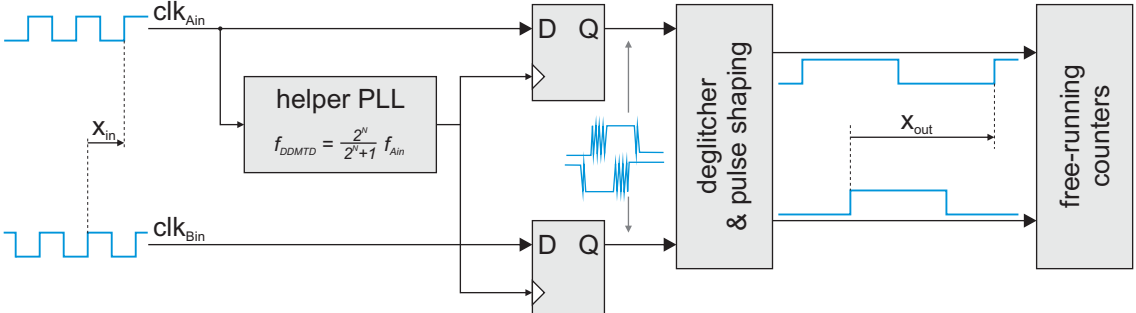
clkAin
clkBin
xin
helper PLL
fDDMTD = 2N/(2N+1) fAin
D Q
D Q
deglitcher & pulse shaping
xout
free-running counters